DocuSign Envelope ID: B970BAFD-8A39-4F1E-BF49-B47E34C9EE04

BAR TYPES

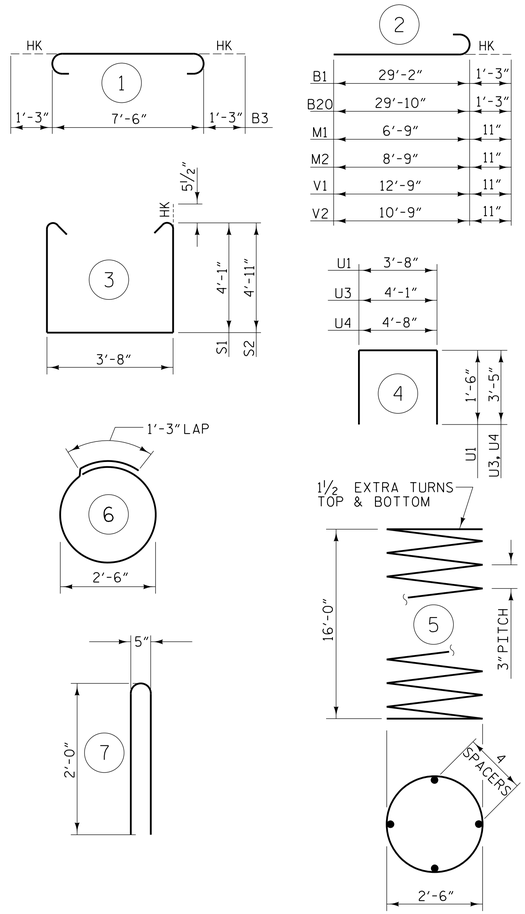

ALL BAR DIMENSIONS ARE OUT TO OUT

BILL OF MATERIAL

BENT 1-STAGE I

BAR	NO.	SIZE	TYPE	LENGTH	WEIGHT
B1	8	#9	2	30'-5"	827
B2	8	#4	STR	11'-7"	62
B3	8	#9	STR	21'-8"	589
B4	8	#4	STR	7'-0"	37
B5	6	#7	STR	46'-0"	564
B6	12	#7	STR	6'-6"	159
B7	12	#7	STR	10'-6"	258
B8	6	#7	STR	7'-4"	90
B9	12	#5	STR	43'-7"	545
S1	72	#5	3	12'-9"	957
S2	54	#5	3	14'-5"	812
S3	33	#4	6	9'-2"	202
T1	96	#9	1	10'-0"	3264
T2	66	#9	STR	7'-8"	1720
U1	30	#4	4	6'-8"	134
U2	32	#4	7	4'-5"	94
U3	4	#4	4	10'-11"	29
U4	4	#4	4	10'-4"	28
M1	24	#8	2	7'-8"	491
M2	24	#8	2	9'-8"	619
V1	24	#8	STR	13'-8"	876
V2	24	#8	STR	11'-8"	748

TOTAL REINFORCING STEEL 13105 lbs.

SPIRAL COLUMN REINFORCING STEEL (SP)

SP1	3	#5	5	531'-0"	1661

TOTAL SPIRAL COLUMN REINFORCING STEEL 1661 lbs.

CLASS "A" CONCRETE - CU. YARDS

POUR 1 - FOOTINGS	24.9 CU. YDS.
POUR 2 - COLUMNS	12.4 CU. YDS.
POUR 3 - CAP	30.5 CU. YDS.
TOTAL CLASS "A" CONCRETE	67.8 CU. YDS.

BENT 1-STAGE II

BAR	NO.	SIZE	TYPE	LENGTH	WEIGHT
B10	8	#4	STR	17'-0"	91
B11	8	#9	STR	45'-4"	1233
B12	6	#7	STR	44'-2"	542
B13	12	#7	STR	15'-0"	368
B14	12	#7	STR	11'-0"	270
B15	6	#7	STR	6'-0"	74
B16	12	#5	STR	43'-0"	538
S2	136	#5	3	14'-5"	2045
S3	22	#4	6	9'-2"	135
T1	64	#9	1	10'-0"	2176
T2	44	#9	STR	7'-8"	1147
U1	36	#4	4	6'-8"	160
U2	32	#4	7	4'-5"	94
M1	16	#8	2	7'-8"	328
M2	16	#8	2	9'-8"	413
V1	16	#8	STR	13'-8"	584
V2	16	#8	STR	11'-8"	498

TOTAL REINFORCING STEEL 10696 lbs.

SPIRAL COLUMN REINFORCING STEEL (SP)

SP1	2	#5	5	531'-0"	1108

TOTAL SPIRAL COLUMN REINFORCING STEEL 1108 lbs.

CLASS "A" CONCRETE - CU. YARDS

POUR 1 - FOOTINGS	16.6 CU. YDS.
POUR 2 - COLUMNS	8.2 CU. YDS.
POUR 3 - CAP	32.4 CU. YDS.
TOTAL CLASS "A" CONCRETE	57.2 CU. YDS.

BENT 1-STAGE III

BAR	NO.	SIZE	TYPE	LENGTH	WEIGHT
B17	8	#9	STR	55'-6"	1510
B18	8	#4	STR	28'-4"	151
B19	8	#4	STR	12'-0"	64
B20	8	#9	2	31'-1"	845
B21	6	#7	STR	42'-4"	519
B22	6	#7	STR	13'-0"	159
B23	6	#7	STR	11'-1"	136
B24	18	#7	STR	15'-0"	552
B25	18	#7	STR	11'-0"	405
B26	12	#5	STR	41'-11"	525
S1	82	#5	3	12'-9"	1090
S2	192	#5	3	14'-5"	2887
S3	44	#4	6	9'-2"	269
T1	128	#9	1	10'-0"	4352
T2	88	#9	STR	7'-8"	2294
U1	60	#4	4	6'-8"	267
U2	56	#4	7	4'-5"	165
U3	4	#4	4	10'-11"	29
U4	4	#4	4	10'-4"	28
M1	32	#8	2	7'-8"	655
M2	32	#8	2	9'-8"	826
V1	32	#8	STR	13'-8"	1168
V2	32	#8	STR	11'-8"	997

TOTAL REINFORCING STEEL 19893 lbs.

SPIRAL COLUMN REINFORCING STEEL (SP)

SP1	4	#5	5	531'-0"	2215

TOTAL SPIRAL COLUMN REINFORCING STEEL 2215 lbs.

CLASS "A" CONCRETE - CU. YARDS

POUR 1 - FOOTINGS	33.2 CU. YDS.
POUR 2 - COLUMNS	16.5 CU. YDS.
POUR 3 - CAP	62.0 CU. YDS.
TOTAL CLASS "A" CONCRETE	111.7 CU. YDS.

PROJECT NO. I-5987B

ROBESON COUNTY

STATION: 617+12.20 -L- POT

SHEET 5 OF 5

STATE OF NORTH CAROLINA
DEPARTMENT OF TRANSPORTATION
RALEIGH

SUBSTRUCTURE

BENT 1 BILL OF MATERIAL

PLANS PREPARED BY:

NV5 ENGINEERS & CONSULTANTS, INC.
3300 REGENCY PARKWAY, SUITE 100
CARY, NC 27518
P: 919.851.1912 www.NV5.com
NC license # F-1333

DOCUMENT NOT CONSIDERED FINAL UNLESS ALL SIGNATURES COMPLETED

NORTH CAROLINA PROFESSIONAL ENGINEER SEAL 019681 KEVIN AUSTIN

Docu Signed by: L. Kevin Austin
7B7B3720EA8B4B...

4/22/2022

DRAWN BY :	W.B. ALLEN	DATE :	12/21
CHECKED BY :	M.D. METZGER	DATE :	12/21
DESIGN ENGINEER OF RECORD:	L. K. AUSTIN	DATE :	01/22

REVISIONS

NO.	BY:	DATE:	NO.	BY:	DATE:
1			3		
2			4		

SHEET NO. S6-44

TOTAL SHEETS 53

4/20/2022 11:11:37 AM G:\Project\209\209207.03\CLIENT\Structures\I-5987B (Y5 - NC 20)\I5987B_SMU_B5_77059.dgn