DocuSign Envelope ID: 3D46988E-E618-4475-94CA-EE3FA75E3A92

NOTES

FOR NOTES SEE SHEET 1 OF 6.

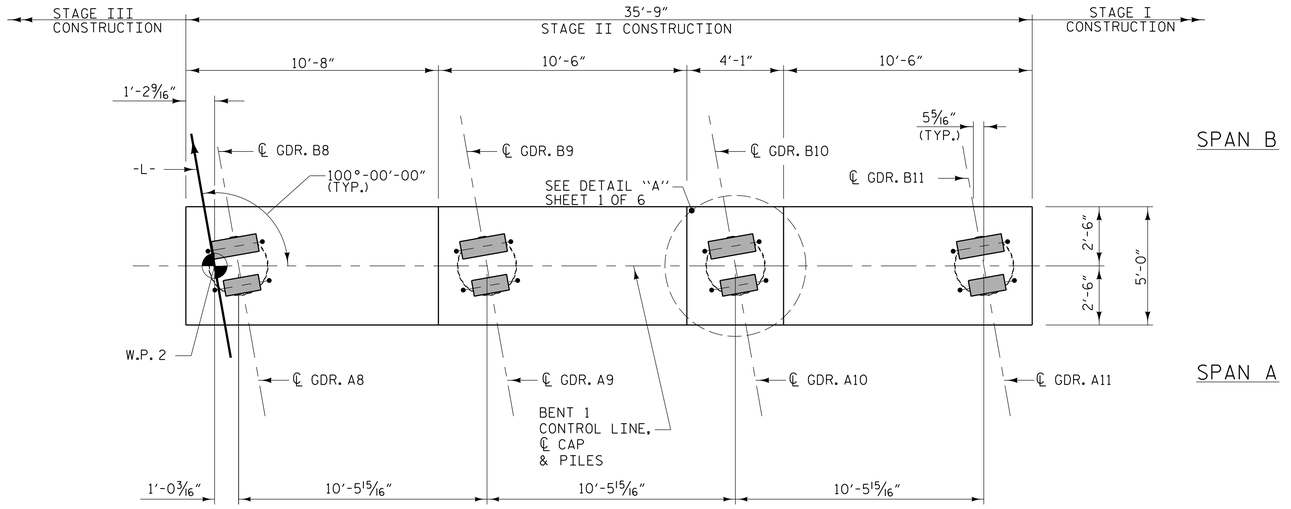

PLAN

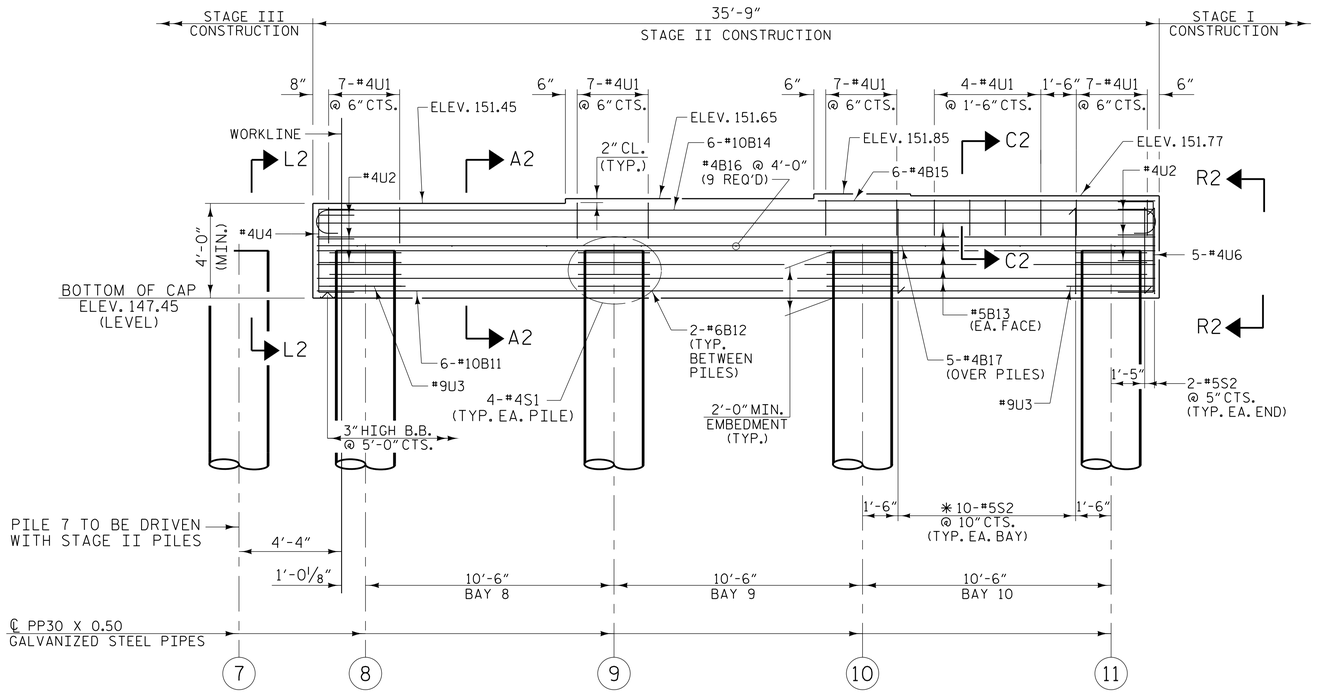

ELEVATION

(#) INDICATES PILE NUMBER

PROJECT NO. I-5987B

ROBESON COUNTY

STATION: 586+14.00 -L- POT

SHEET 3 OF 6

PLANS PREPARED BY:

NV5

NV5 ENGINEERS & CONSULTANTS, INC.
3300 REGENCY PARKWAY, SUITE 100
CARY, NC 27518
P: 919.851.1912 www.NV5.com
NC License # F-1333

STATE OF NORTH CAROLINA
DEPARTMENT OF TRANSPORTATION
RALEIGH

SUBSTRUCTURE

BENT 1

STAGE II

NORTH CAROLINA PROFESSIONAL SEAL 019661 ENGINEER L. KEVIN AUSTIN
Digitally signed by L. Kevin Austin
4/24/2022

REVISIONS						SHEET NO.
NO.	BY:	DATE:	NO.	BY:	DATE:	S5-43
1			3			TOTAL SHEETS
2			4			64

DOCUMENT NOT CONSIDERED FINAL UNLESS ALL SIGNATURES COMPLETED

DRAWN BY :	J.A. PANDOLI	DATE :	2/22
CHECKED BY :	G.F. WILSON	DATE :	2/22
DESIGN ENGINEER OF RECORD:	L.K. AUSTIN	DATE :	2/22

4/23/2022 9:35:52 AM G:\Project\2019\2019217.03\CLIENT\Structures\I-5987B (Big Marsh Swamp)\I5987B_SMU_B3_770536.dgn