DocuSign Envelope ID: 3D46988E-E618-4475-94CA-EE3FA75E3A92

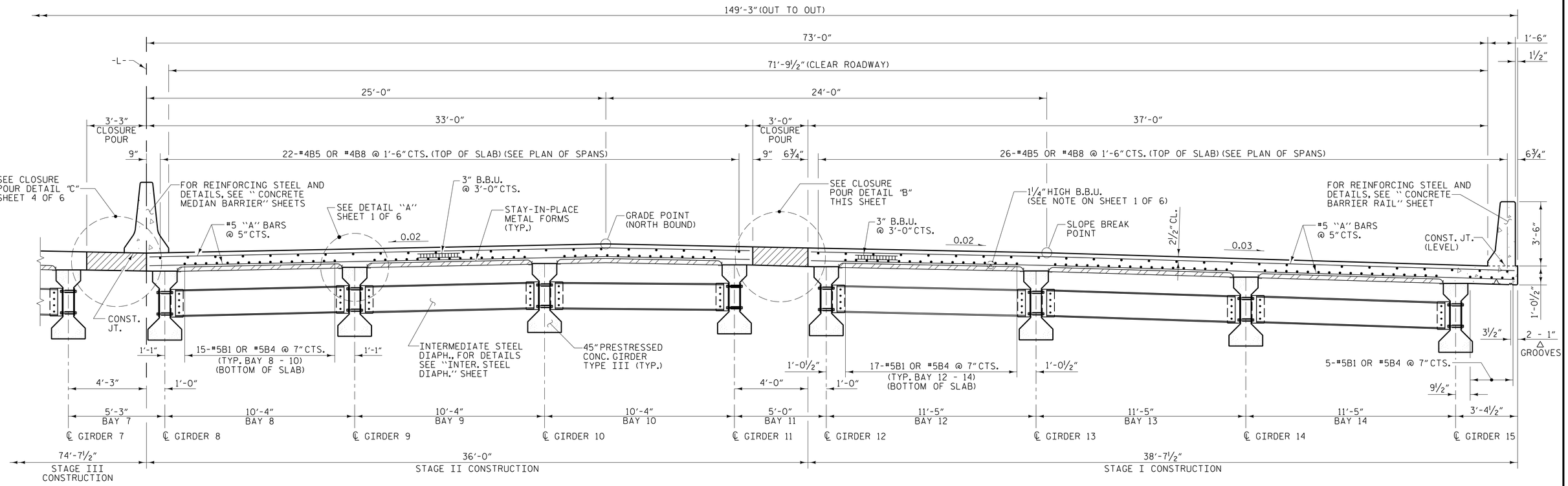

TYPICAL HALF SECTION

(SHOWING INTERMEDIATE DIAPHRAGMS)

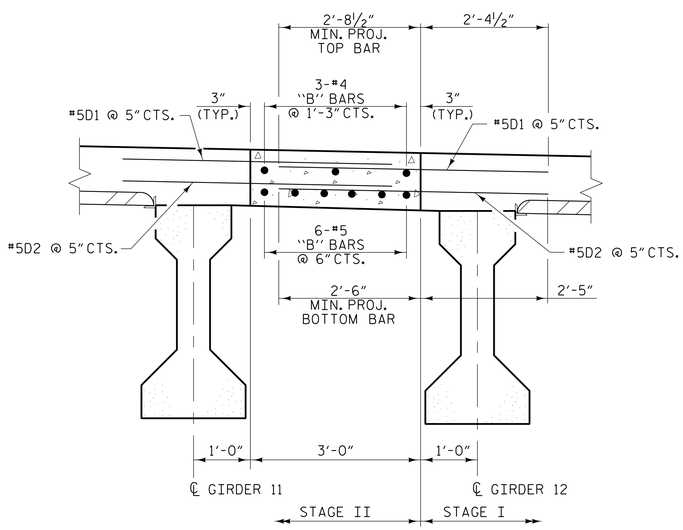

CLOSURE POUR DETAIL "B"

(STAGE II CONSTRUCTION)
DOWELS SHALL BE PLACED IN THE SAME HORIZONTAL PLANE AS THE TOP AND BOTTOM SLAB REINFORCING STEEL

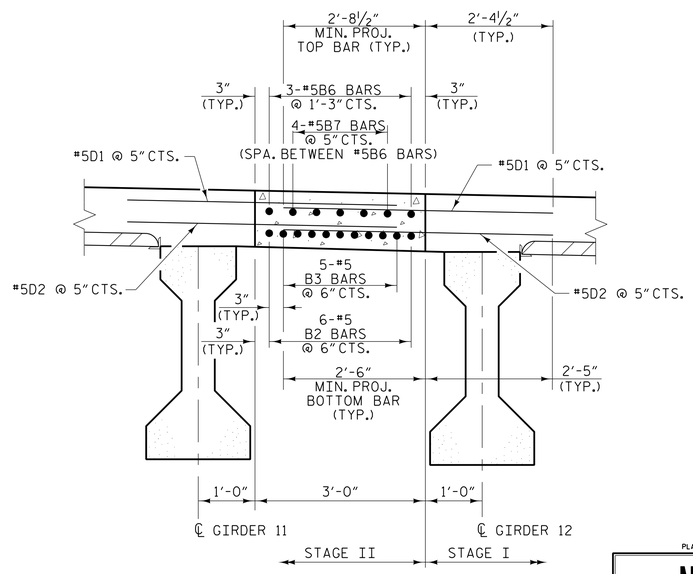

CLOSURE POUR DETAIL "D"

(STAGE II CONSTRUCTION)
DOWELS SHALL BE PLACED IN THE SAME HORIZONTAL PLANE AS THE TOP AND BOTTOM SLAB REINFORCING STEEL

PROJECT NO. I-5987B
ROBESON COUNTY
STATION: 586+14.00 -L- POT

SHEET 3 OF 6

PLANS PREPARED BY:
NV5 ENGINEERS & CONSULTANTS, INC.
3300 REGENCY PARKWAY, SUITE 100
CARY, NC 27518
P: 919.851.1912 www.NV5.com
NC License # F-1333

DOCUMENT NOT CONSIDERED FINAL UNLESS ALL SIGNATURES COMPLETED

NORTH CAROLINA PROFESSIONAL SEAL 019661 ENGINEER L. KEVIN AUSTIN
Docusigned by: L. Kevin Austin
4/24/2022

STATE OF NORTH CAROLINA
DEPARTMENT OF TRANSPORTATION
RALEIGH

SUPERSTRUCTURE
TYPICAL SECTION

REVISIONS						SHEET NO.
NO.	BY:	DATE:	NO.	BY:	DATE:	S5-11
1			3			TOTAL SHEETS
2			4			64

DRAWN BY : W. B. ALLEN DATE : 5/21
CHECKED BY : G. F. WILSON DATE : 5/21
DESIGN ENGINEER OF RECORD: L. K. AUSTIN DATE : 2/22

4/22/2022 5:37:47 PM G:\Project\209\209217.03\CLENT\Structures\I-5987B (Big Marsh Swamp)\5987B_SMU_TS3_770536.dgn