DocuSign Envelope ID: 8B9D7C66-0EB9-44C8-B305-62EE7BA2C531

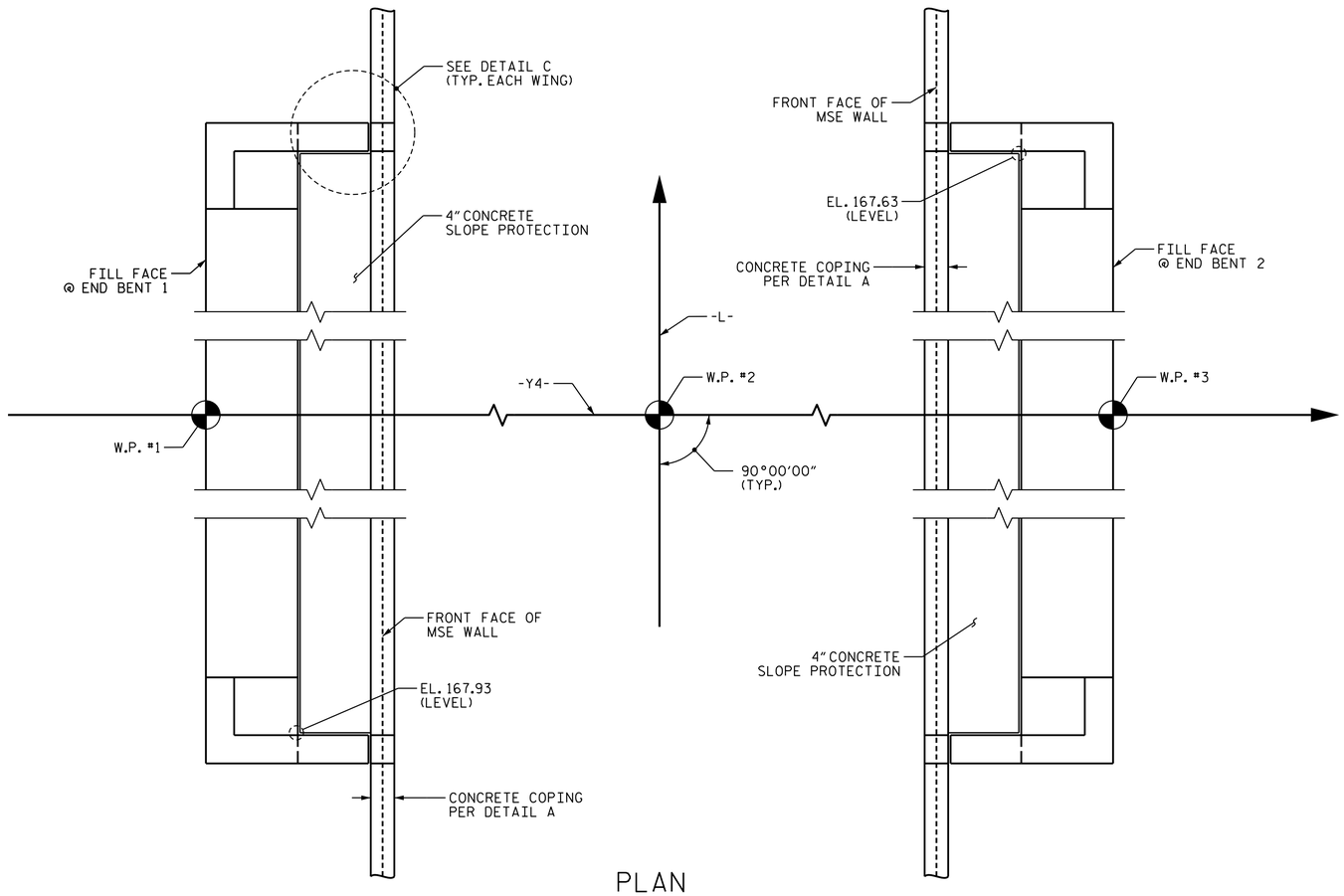

PLAN

ELEVATIONS SHOWN ARE AT TOP OF
SLOPE PROTECTION AT FACE OF END BENT

NOTES:

SLOPE PROTECTION SHALL CONSIST OF 4" POURED-IN-PLACE CONCRETE PAVING AS SHOWN IN THE DETAILS ON THIS SHEET. CONCRETE SHALL BE CLASS "B". THE CONCRETE SURFACE SHALL BE FLOATED WITH A WOODEN FLOAT AND FINISHED. WELDED WIRE FABRIC REINFORCING SHALL BE 6 X 6 - W1.4 X W1.4. THE COST OF THE WELDED WIRE FABRIC SHALL BE INCLUDED IN THE CONTRACT UNIT PRICE BID PER SQUARE YARD FOR SLOPE PROTECTION.

THE SLOPE PROTECTION IS DETAILED TO FIT WITH THE MSE WALL COPING DETAIL A. IF MSE WALL COPING DETAIL B IS USED, SLOPE PROTECTION SHALL BE ADJUSTED TO FIT. COORDINATE WITH THE MSE WALL FABRICATOR FOR ACTUAL WALL THICKNESS AND COPING TO BE USED. ADJUST SLOPE PROTECTION QUANTITIES AS NECESSARY TO FIT COPING USED.

BRIDGE @ 24+76.86 -Y4-	4 INCH SLOPE PROTECTION	WELDED WIRE FABRIC (24" WIDE)
	SQUARE YARDS	APPROX. L.F.
END BENT 1	12	44
END BENT 2	12	44

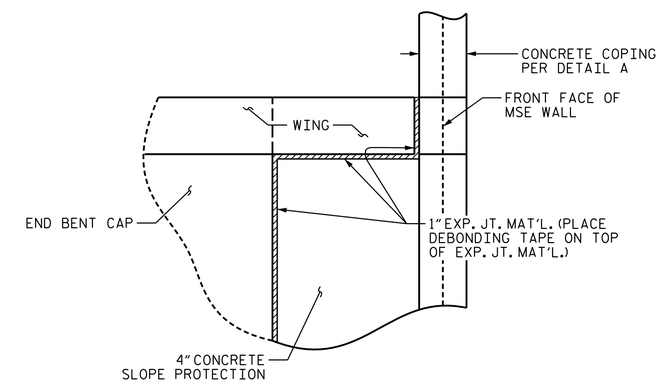

DETAIL C

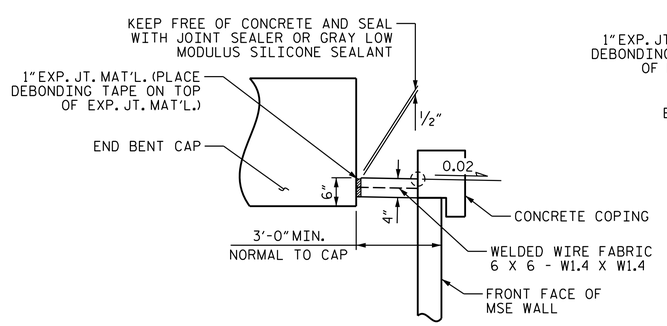

DETAIL A

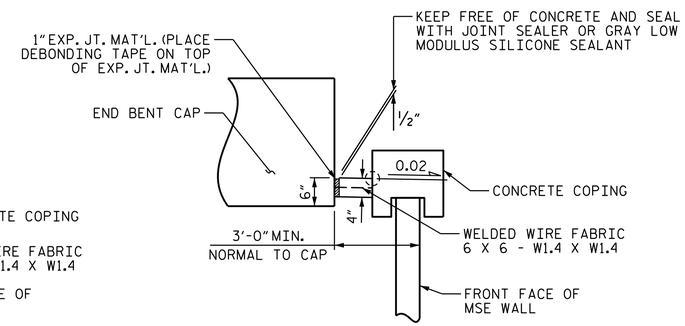

DETAIL B

COPING DETAILS

THE CONTRACTOR HAS THE OPTION OF USING COPING IN DETAILS A OR B

PROJECT NO. I-5987B
ROBESON COUNTY
STATION: 24+76.86 -Y4-

STATE OF NORTH CAROLINA
DEPARTMENT OF TRANSPORTATION
RALEIGH

CONCRETE SLOPE PROTECTION

DOCUMENT NOT CONSIDERED
FINAL UNLESS ALL
SIGNATURES COMPLETED

PLANS PREPARED BY:
MOTT MACDONALD
PO Box 700
Fuquay-Varina, NC 27526
(919) 552-2253
www.mottmac.com
LICENSE NO. F-0669

NORTH CAROLINA PROFESSIONAL SEAL 043301 ENGINEER JONATHAN T. WILLIAMS
DocuSigned by: Jonathan T. Williams
CF8B34B85D82449...
21 March 2022

REVISIONS						SHEET NO.
NO.	BY:	DATE:	NO.	BY:	DATE:	S4-27
1			3			TOTAL SHEETS
2			4			29

DRAWN BY: R. L. DICKE DATE: 8-2021
CHECKED BY: J. M. ROBINSON DATE: 8-2021
DESIGN ENGINEER OF RECORD: J. T. WILLIAMS DATE: 8-2021

w157077
G:\50110019\1_NV5_I-5987B\I-5987B\Structures\Plans\I-5987B_SMU_SP_770154.dgn
3/18/2022 10:52:55 AM