DocuSign Envelope ID: A7B2C6D4-BFFA-4FA5-A411-9E71B3DE035D

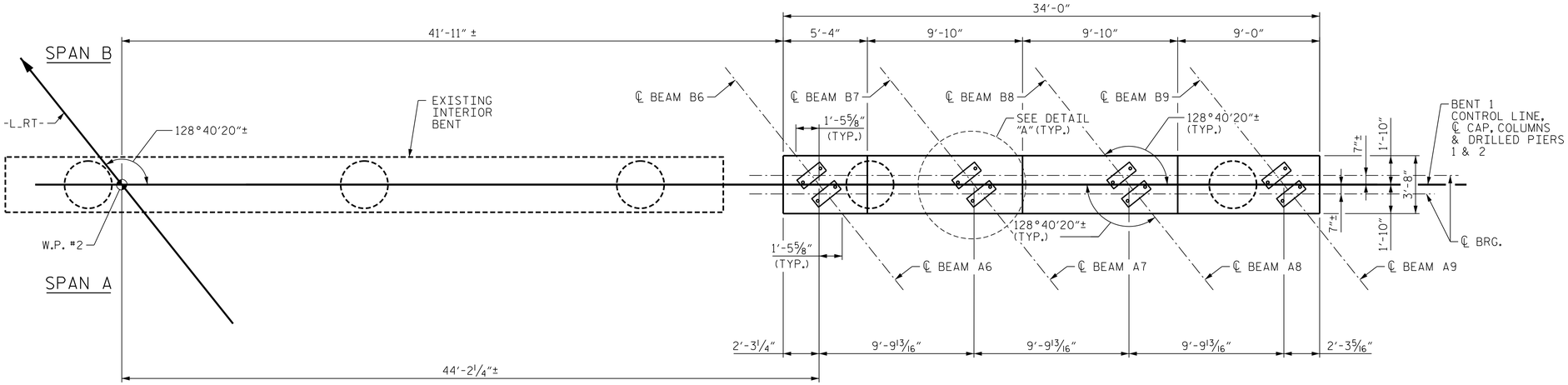

PLAN

(CRASHWALL NOT SHOWN FOR CLARITY)

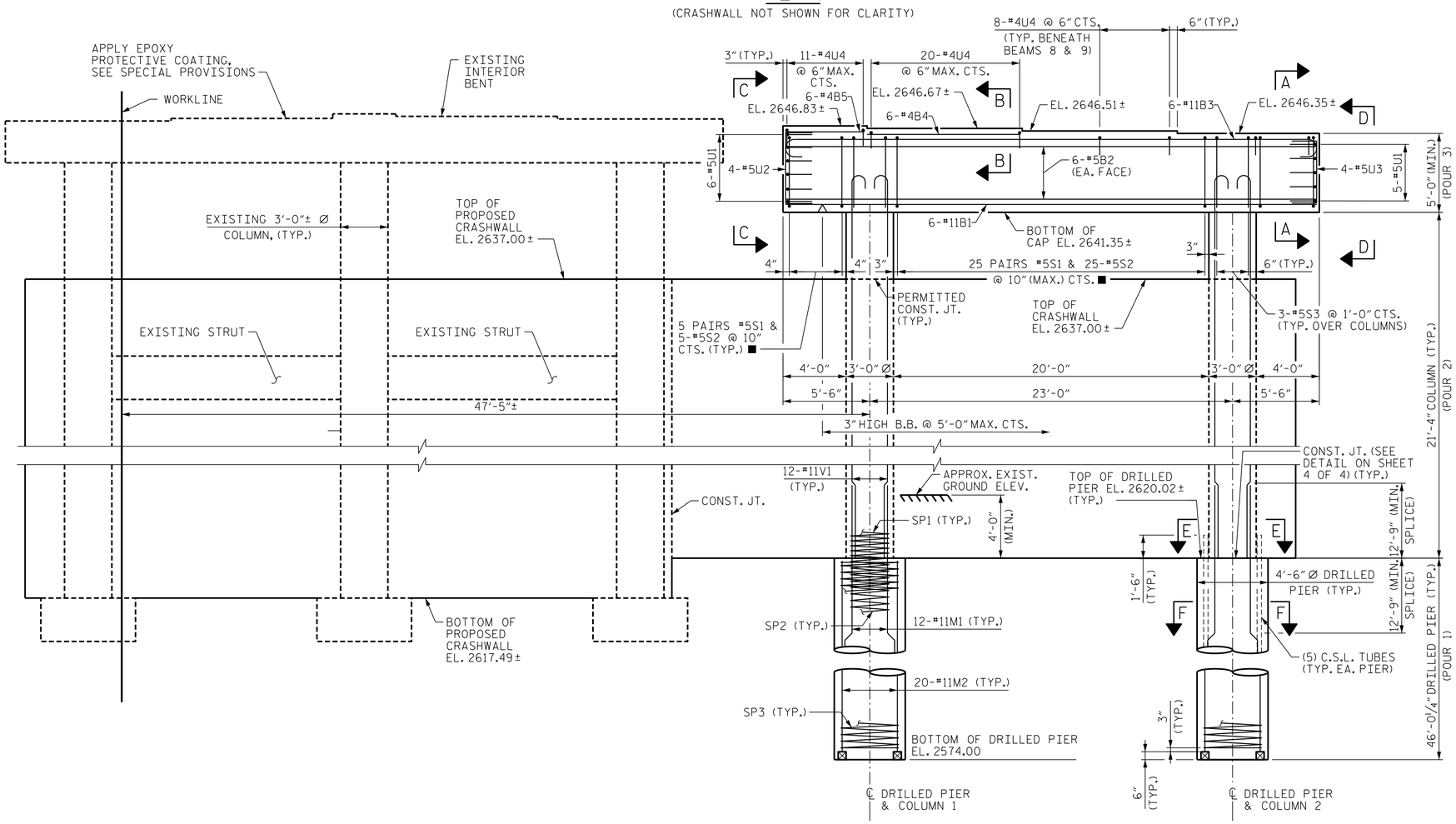

ELEVATION

■ = INVERT ALTERNATE STIRRUPS

NOTES

STIRRUPS AND "U" BARS IN CAP MAY BE SHIFTED SLIGHTLY AS NECESSARY TO CLEAR ANCHOR BOLTS.

HOOKS ON "V" BARS MAY BE TURNED AS NECESSARY FOR PLACING REINFORCING STEEL.

THE CONTRACTOR'S ATTENTION IS CALLED TO THE FACT THAT THE LONGITUDINAL REINFORCEMENT IN THE DRILLED PIERS IS DETAILED WITH 3 FEET OF EXTRA LENGTH.

ALL STEEL IN THE DRILLED PIERS IS INCLUDED IN THE PAY ITEMS FOR "REINFORCING STEEL" AND "SPIRAL COLUMN REINFORCING STEEL" OR "EPOXY COATED SPIRAL COLUMN REINFORCING STEEL".

THE LOCATION OF THE CONSTRUCTION JOINT IN THE DRILLED PIERS IS BASED ON AN APPROXIMATE GROUND LINE ELEVATION. IF THE CONSTRUCTION JOINT IS ABOVE THE ACTUAL GROUND ELEVATION, THE CONTRACTOR SHALL PLACE THE CONSTRUCTION JOINT 4 FOOT BELOW THE GROUND LINE.

FOR SECTION VIEWS, SEE "SUBSTRUCTURE BENT 1 SECTIONS AND DETAILS" SHEET.

GRADE DATA, ELEVATIONS, DIMENSIONS, AND STATIONS WERE DETERMINED USING THE BEST INFORMATION AVAILABLE AND ARE PROVIDED FOR INFORMATION ONLY. THE CONTRACTOR SHALL SURVEY THE EXISTING STRUCTURE AND NOTIFY THE ENGINEER IN WRITING OF ANY DISCREPANCIES PRIOR TO ORDERING MATERIALS.

FOR CRASHWALL DETAILS, SEE "SUBSTRUCTURE BENT 1 CRASHWALL" SHEETS.

THE TOP SURFACE AREAS OF THE BENT CAPS SHALL BE CURED IN ACCORDANCE WITH THE STANDARD SPECIFICATIONS EXCEPT THE MEMBRANE CURING COMPOUND METHOD SHALL NOT BE USED.

EPOXY COAT THE BENT CAP AFTER ADJUSTMENTS ARE MADE TO BEARINGS.

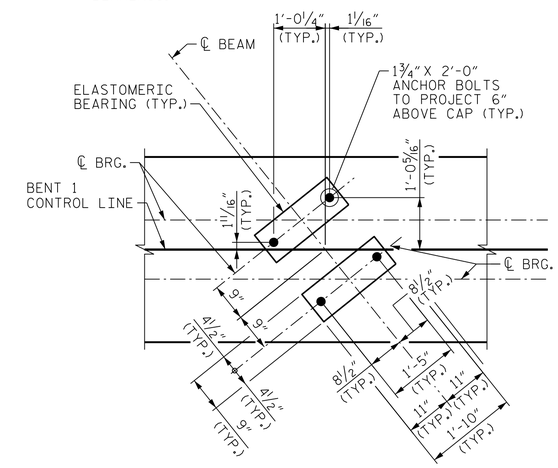

DETAIL "A"

PROJECT NO. B-3186/B-5898

HAYWOOD COUNTY

STATION: 68+65.75± -L_RT-

SHEET 1 OF 4

STATE OF NORTH CAROLINA
DEPARTMENT OF TRANSPORTATION
RALEIGH

SUBSTRUCTURE BENT 1 PLAN AND ELEVATION

NORTH CAROLINA PROFESSIONAL SEAL 043854 ENGINEER ERIC M. NOLTING

Eric Nolting 1/25/2022

DOCUMENT NOT CONSIDERED FINAL UNLESS ALL SIGNATURES COMPLETED

HDR Engineering, Inc. of the Carolinas
555 Fayetteville St., Suite 900 Raleigh, N.C. 27601
N.C.B.E.L.S. License Number: F-0116

REVISIONS							
NO.	BY:	DATE:	NO.	BY:	DATE:		SHEET NO. S03R-35
1	--	--	3	--	--		TOTAL SHEETS 61
2	--	--	4	--	--		

DES BY: D. MAST	DATE: 07/21	DWG BY: D. CARTER	DATE: 07/21
DES CHK: M. NEIHEISEL	DATE: 07/21	CHK BY: E. NOLTING	DATE: 08/21

PLOT DRIVER: NCDOT STRUCTURES DEFAULT PLOTTER.plt PENTABLE: NCDOT STRUCTURES DEFAULT PEN.tbl
USER: PPETERSO DATE: 1/24/2022 TIME: 2:41:17 PM
FILE: ...\404_170_B5898B3186_SMU_B1_035_430107.dgn