DocuSign Envelope ID: BC65CD53-1596-48F3-9253-1168E36B91DD

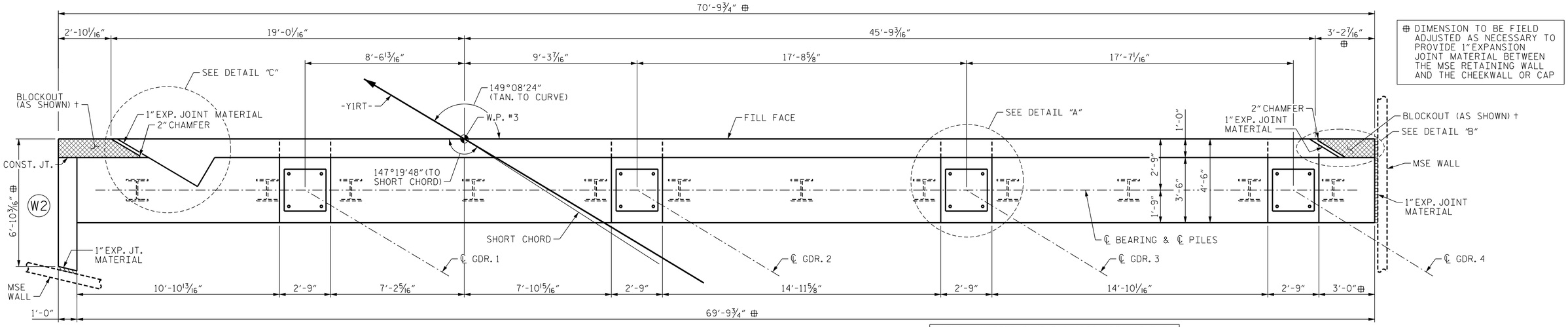

⊕ DIMENSION TO BE FIELD ADJUSTED AS NECESSARY TO PROVIDE 1" EXPANSION JOINT MATERIAL BETWEEN THE MSE RETAINING WALL AND THE CHEEKWALL OR CAP

† THE CONCRETE IN THE SHADED AREA OF THE CHEEKWALL AND BACKWALL SHALL BE POURED AFTER THE BARRIER RAILS ARE CAST IF SILP FORMING IS USED.

PLAN

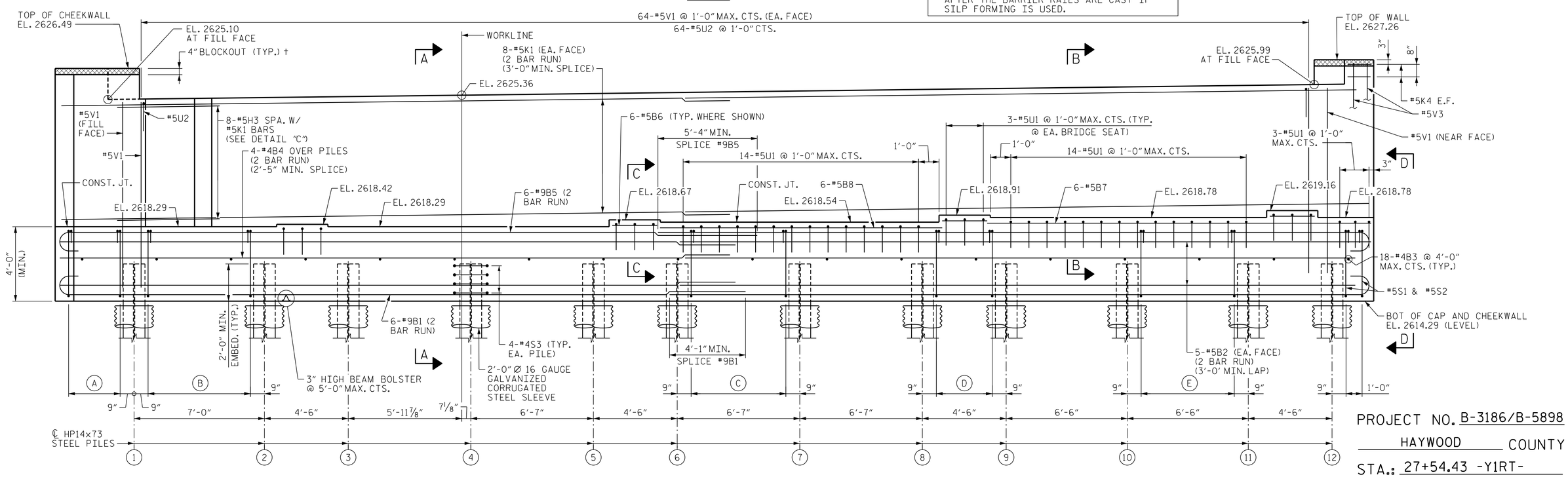

ELEVATION

STIRRUP SPACING

(A) 4 SETS OF #5S1 W/ #5S2 @ 1'-0" CTS.

(B) 7 SETS OF #5S1 W/ #5S2 @ 11" CTS.

(C) 7 SETS OF #5S1 W/ #5S2 @ 1'-0" MAX. CTS. (TYP. EA. 6'-7" BAY)

(D) 4 SETS OF #5S1 W/ #5S2 @ 1'-0" CTS. (TYP. EA. 4'-6" BAY)

(E) 6 SETS OF #5S1 W/ #5S2 @ 1'-0" CTS. (TYP. EA. 6'-6" BAY)

NOTES

FOR SECTIONS A-A, B-B, AND C-C, VIEW D-D AND ADDITIONAL NOTES, SEE "END BENT 2 SECTIONS AND DETAILS" SHEET.

FOR DETAILS "A", "B", AND "C" SEE "END BENT 2 CHEEKWALL DETAILS" SHEET.

NORTH CAROLINA PROFESSIONAL SEAL 040791 ENGINEER W. BRIAN WATSON

W. Brian Watson 1/24/2022

HDR Engineering, Inc. of the Carolinas
555 Fayetteville St., Suite 900 Raleigh, N.C. 27601
N.C.B.E.L.S. License Number: F-0116

DOCUMENT NOT CONSIDERED FINAL UNLESS ALL SIGNATURES COMPLETED

PROJECT NO. B-3186/B-5898

HAYWOOD COUNTY

STA.: 27+54.43 -Y1RT-

SHEET 1 OF 3

STATE OF NORTH CAROLINA
DEPARTMENT OF TRANSPORTATION
RALEIGH

SUBSTRUCTURE END BENT 2 PLAN AND ELEVATION

REVISIONS						
NO.	BY:	DATE:	NO.	BY:	DATE:	SHEET NO. S02-41
1	--	--	3	--	--	TOTAL SHEETS 48
2	--	--	4	--	--	

DES BY: N. DAVIS	DATE: 06/21	DWG BY: B. PETERSON	DATE: 06/21
DES CHK: R. BECK	DATE: 07/21	CHK BY: R. BECK	DATE: 07/21

PLOT DRIVER: NCDOT STRUCTURES DEFAULT PLOTTER.plt PENTABLE: NCDOT STRUCTURES DEFAULT PEN.tbl
USER: PPETERSO DATE: 1/24/2022 TIME: 1:35:34 PM
FILE: ...\402_200_B3186-B5898_SMU_E2_041_430168.dgn