DocuSign Envelope ID: BC65CD53-1596-48F3-9253-1168E36B91DD

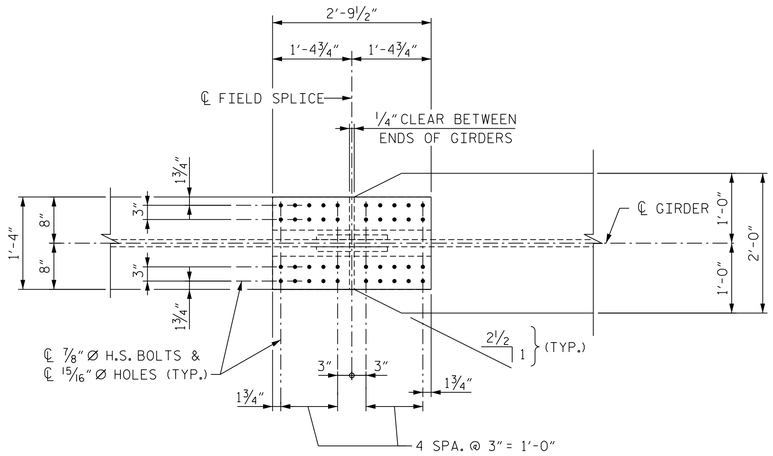

PLAN (TOP OF TOP FLANGE)

(STUDS NOT SHOWN FOR CLARITY)

✳ = SHEAR STUDS ARE TO BE SHOP WELDED ON TOP OF PLATE BEFORE FIELD ASSEMBLY

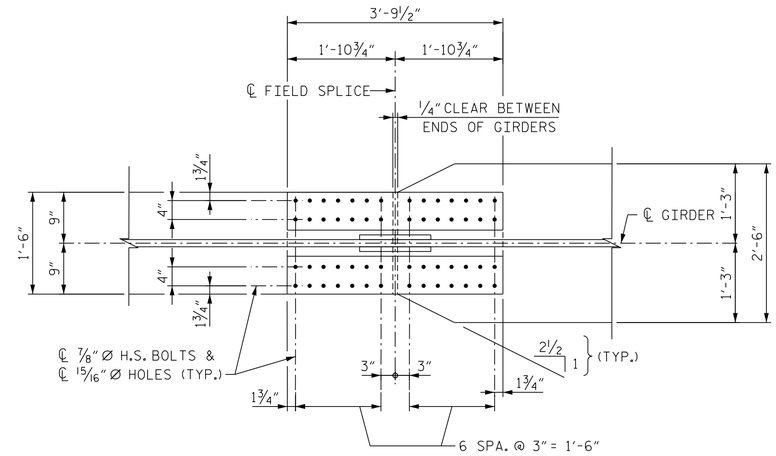

PLAN (TOP OF BOTTOM FLANGE)

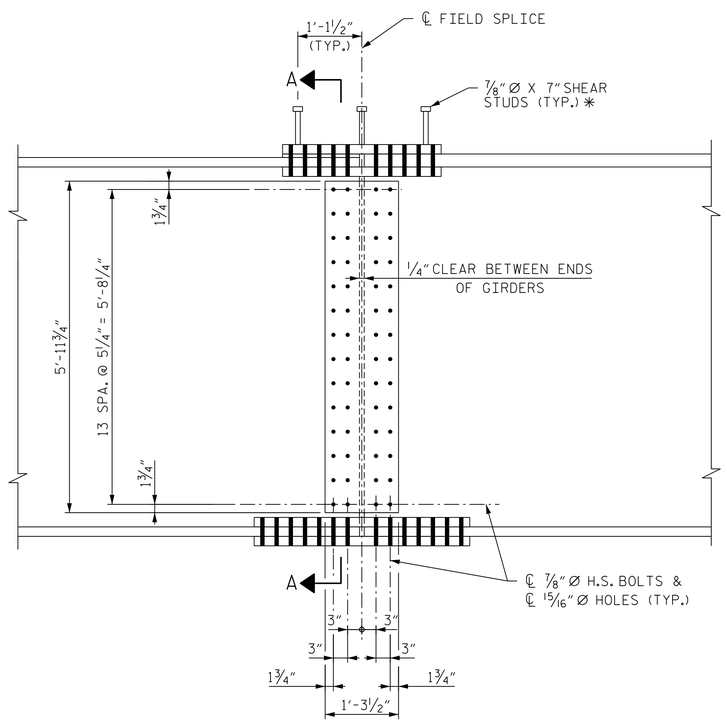

ELEVATION

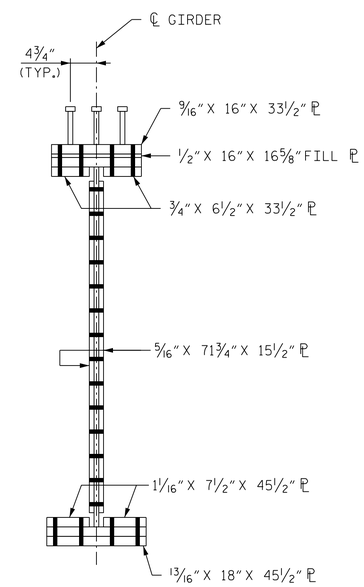

SECTION A-A

PROJECT NO. B-3186/B-5898

HAYWOOD COUNTY

STATION: 27+54.43 -Y1RT-

SHEET 1 OF 2

STATE OF NORTH CAROLINA
DEPARTMENT OF TRANSPORTATION
RALEIGH

SUPERSTRUCTURE BOLTED FIELD SPLICE DETAILS - TYPE "A"

NORTH CAROLINA PROFESSIONAL SEAL 040791 ENGINEER W. BRIAN WATSON

W. Brian Watson 1/24/2022

HDR Engineering, Inc. of the Carolinas
555 Fayetteville St., Suite 900 Raleigh, N.C. 27601
N.C.B.E.L.S. License Number: F-0116

DOCUMENT NOT CONSIDERED FINAL UNLESS ALL SIGNATURES COMPLETED

REVISIONS						
NO.	BY:	DATE:	NO.	BY:	DATE:	SHEET NO. S02-18
1	--	--	3	--	--	TOTAL SHEETS 48
2	--	--	4	--	--	

DES BY: S. NIFONG	DATE : 05/21	DWG BY: B. PETERSON	DATE : 05/21
DES CHK: B. WATSON	DATE : 05/21	CHK BY: B. WATSON	DATE : 05/21

PLOT DRIVER: NCDOT STRUCTURES DEFAULT PLOTTER.plt PENTABLE: NCDOT STRUCTURES DEFAULT PEN.tbl
USER: PPETERSO DATE: 1/24/2022 TIME: 1:29:21 PM
FILE: ...\402_085_B3186-B5898_SMU_SS_018_430168.dgn