DocuSign Envelope ID: BC65CD53-1596-48F3-9253-1168E36B91DD

NOTES

FOR SECTION A-A, SEE "SUPERSTRUCTURE TYPICAL SECTION" SHEET.

SEE "SUPERSTRUCTURE PLAN OF SPANS ARC OFFSETS" SHEET FOR OUTSIDE EDGE OF DECK CURVE OFFSETS.

FOR REINFORCING STEEL IN CONCRETE BARRIER RAIL, SEE "SUPERSTRUCTURE CONCRETE BARRIER RAIL" SHEETS.

#5 "A" BARS ARE TO BE PLACED RADIALLY SPACED @ 6" CTS. ALONG RIGHT OUTSIDE EDGE OF SUPERSTRUCTURE.

FOR DECK POURING SEQUENCE, SEE "SUPERSTRUCTURE POUR SEQUENCE" SHEET.

FOR DETAIL D, SEE "SUPERSTRUCTURE PLAN OF SPANS" SHEET 4 OF 4.

FOR LOCATION OF TRANSVERSE CONSTRUCTION JOINTS, SEE "SUPERSTRUCTURE POUR SEQUENCE" SHEET.

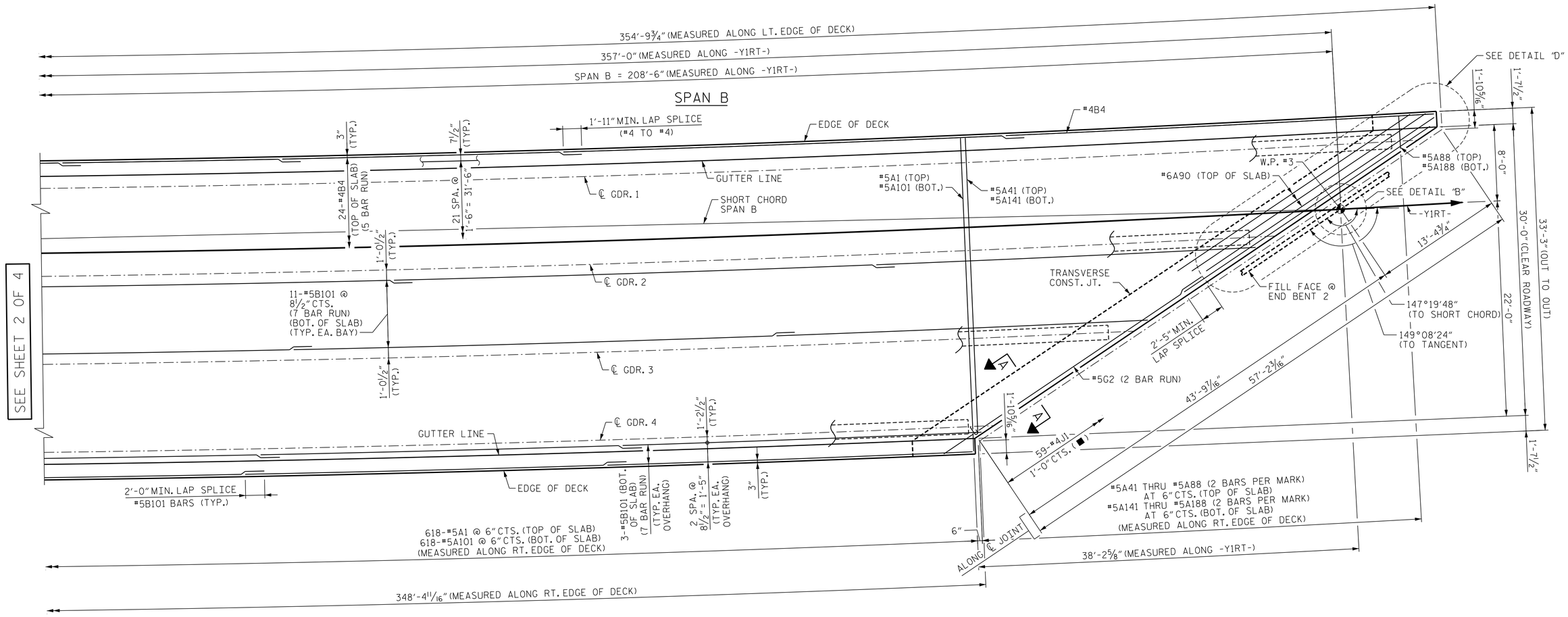

PARTIAL PLAN OF SPANS - SPAN B

■ = SEE "SUPERSTRUCTURE EXPANSION JOINT SEAL DETAILS" SHEET FOR PLACEMENT OF #4J1 BARS.

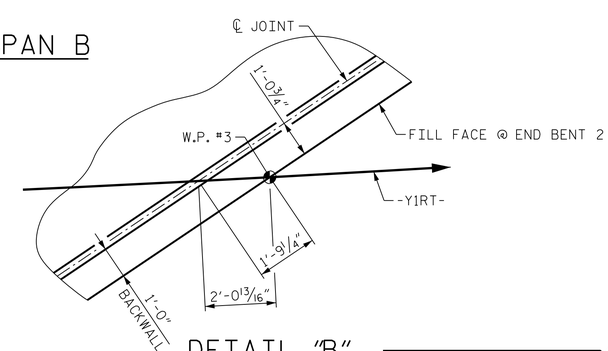

DETAIL "B"

PROJECT NO. B-3186/B-5898

HAYWOOD COUNTY

STATION: 27+54.43 -Y1RT-

SHEET 3 OF 4

STATE OF NORTH CAROLINA
DEPARTMENT OF TRANSPORTATION
RALEIGH

SUPERSTRUCTURE PLAN OF SPANS

NORTH CAROLINA PROFESSIONAL SEAL 040791 ENGINEER W. BRIAN WATSON

W. Brian Watson 1/24/2022

HDR Engineering, Inc. of the Carolinas
555 Fayetteville St., Suite 900 Raleigh, N.C. 27601
N.C.B.E.L.S. License Number: F-0116

DOCUMENT NOT CONSIDERED FINAL UNLESS ALL SIGNATURES COMPLETED

REVISIONS								SHEET NO. S02-10
NO.	BY:	DATE:	NO.	BY:	DATE:			TOTAL SHEETS 48
1	--	--	3	--	--			
2	--	--	4	--	--			

DES BY: S. NIFONG	DATE: 04/21	DWG BY: M. SELLS	DATE: 04/21
DES CHK: H. ABU NIMEH	DATE: 07/21	CHK BY: H. ABU NIMEH	DATE: 07/21

PLOT DRIVER: NCDOT STRUCTURES DEFAULT PLOTTER.plt PENTABLE: NCDOT STRUCTURES DEFAULT PEN.tbl
USER: PPETERSO DATE: 1/24/2022 TIME: 1:27:17 PM
FILE: ...\402_045_B3186-B5898_SMU_S1_010_430168.dgn