DocuSign Envelope ID: 369EAE81-7110-4E60-8E1E-AF07E961A02F

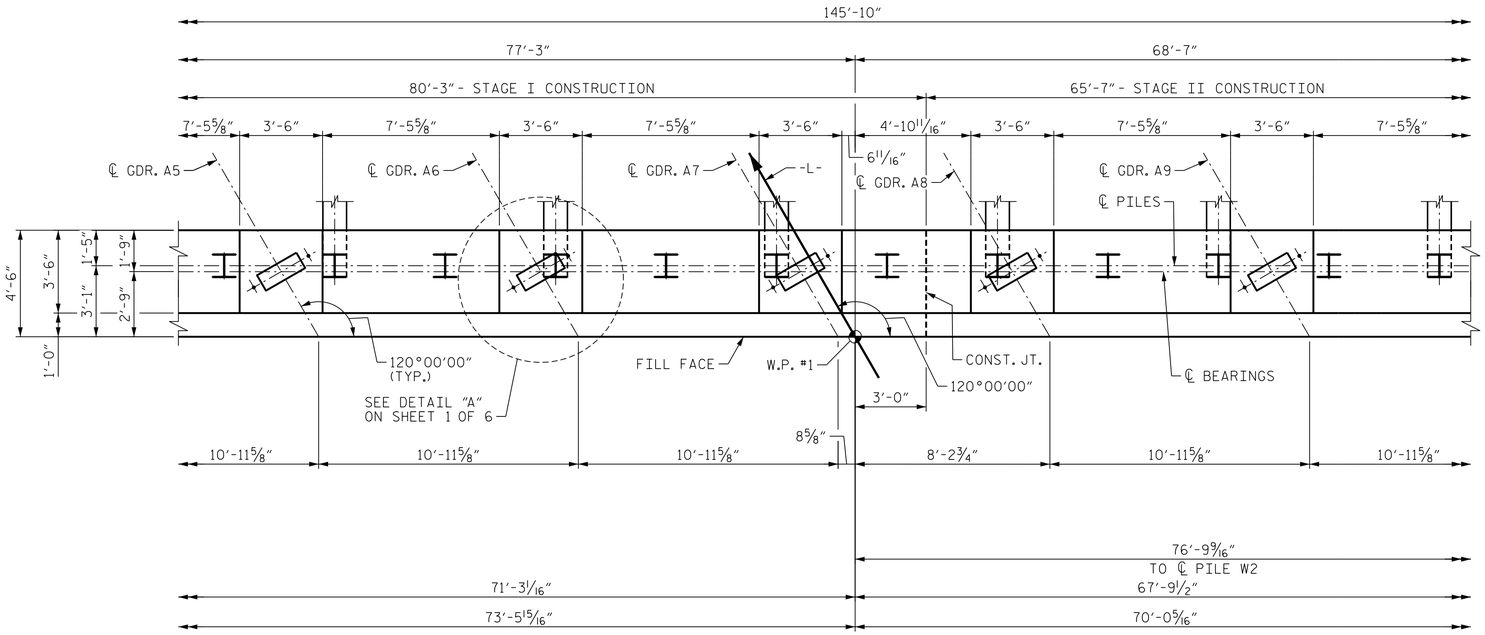

PARTIAL PLAN

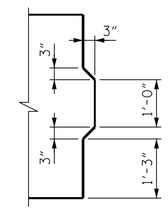

SHEAR KEY DETAIL

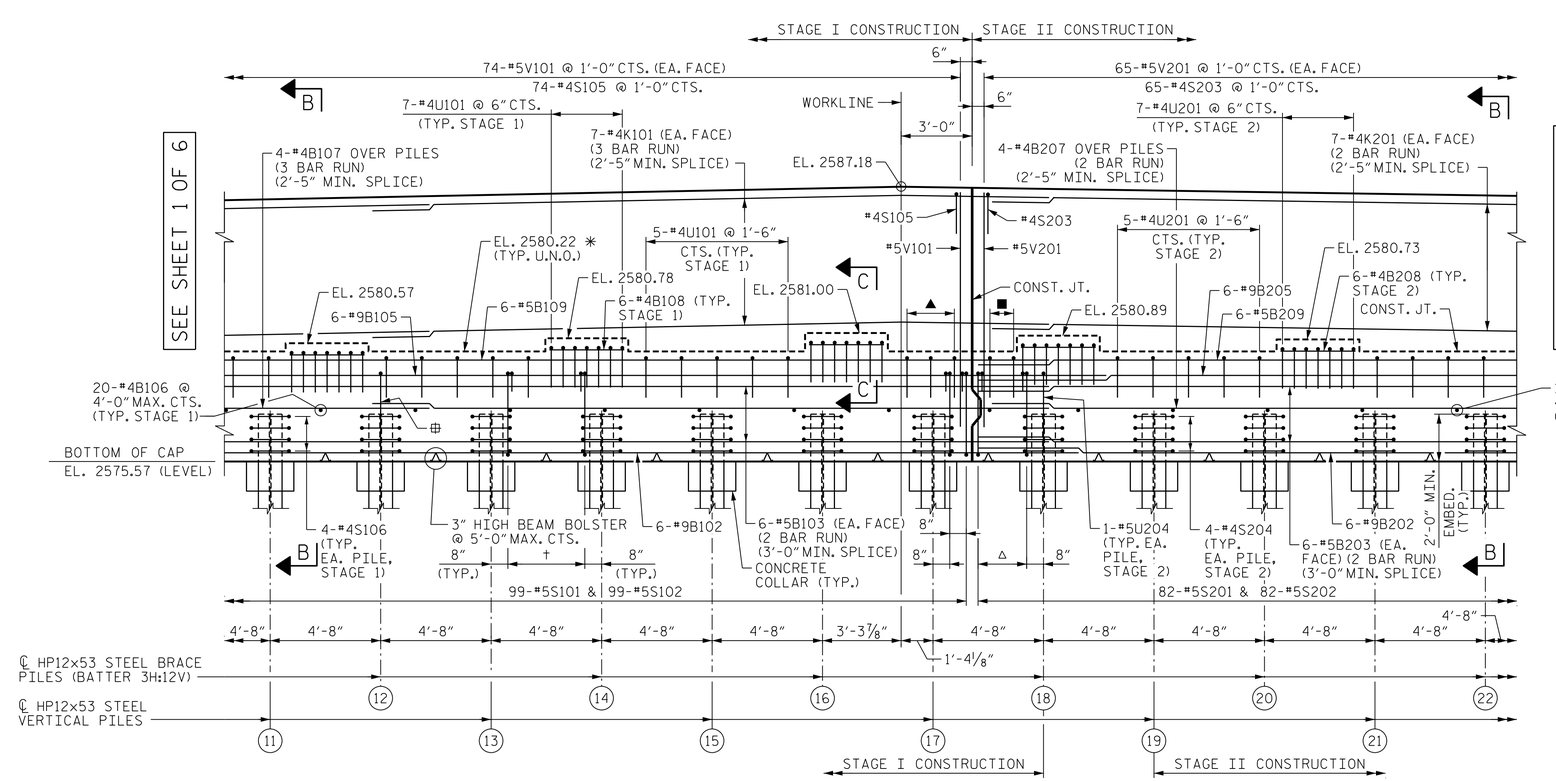

PARTIAL ELEVATION

*FOR LOCATION OF ELEVATION BETWEEN BRIDGE SEAT BUILDUP, SEE "SUBSTRUCTURE END BENT 1 SECTIONS AND DETAILS" SHEET 5 OF 6.

† = 6-#5 "S" BARS @ 8" CTS. (TYP. BTWN. PILES)

⊕ = 1-#5U104 (TYP. OVER PILES, STAGE 1)

△ = 4-#5 "S" BARS @ 8" CTS.

▲ = 3-#4U101 @ 1'-6" CTS.

■ = 2-#4U201 @ 1'-6" CTS.

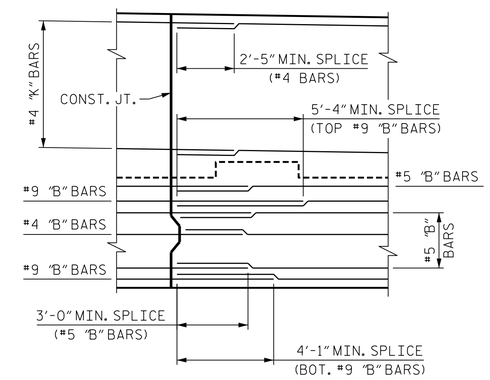

SPLICE DETAIL

PROJECT NO. B-3186/B-5898

HAYWOOD COUNTY

STATION: 42+71.13 -L-

SHEET 2 OF 6

STATE OF NORTH CAROLINA
DEPARTMENT OF TRANSPORTATION
RALEIGH

SUBSTRUCTURE END BENT 1 PLAN AND ELEVATION STAGES 1 & 2

REVISIONS							SHEET NO. S01-39
NO.	BY:	DATE:	NO.	BY:	DATE:		
1			3				TOTAL SHEETS 59
2			4				

NORTH CAROLINA PROFESSIONAL SEAL 040757 ENGINEER S. KENT DICKENS

1/25/2022

HDR Engineering, Inc. of the Carolinas
555 Fayetteville St., Suite 900 Raleigh, N.C. 27601
N.C.B.E.L.S. License Number: F-0116

DOCUMENT NOT CONSIDERED FINAL UNLESS ALL SIGNATURES COMPLETED

DES BY: K. DICKENS	DATE: 06/21	DWG BY: B. PETERSON	DATE: 06/21
DES CHK: L. GUALTIERI	DATE: 06/21	CHK BY: K. DICKENS	DATE: 07/21

PLOT DRIVER: NCDOT STRUCTURES DEFAULT PLOTTER.plt PENTABLE: NCDOT STRUCTURES DEFAULT PEN.tbl
USER: PPETERSO DATE: 1/25/2022 TIME: 8:32:01 AM
FILE: ...\401_190_B5898B186_SMU_E1_039_430168.dgn