DocuSign Envelope ID: 82D57B34-DF79-4367-857B-900A01E32C48

PROJ. REFERENCE NO.	SHEET NO.
B-3186 / B-5898	TMP-38

HDR Engineering, Inc. of the Carolinas
555 Fayetteville St, Suite 900 Raleigh, N.C. 27601
N.C.B.E.L.S. License Number: F-0116

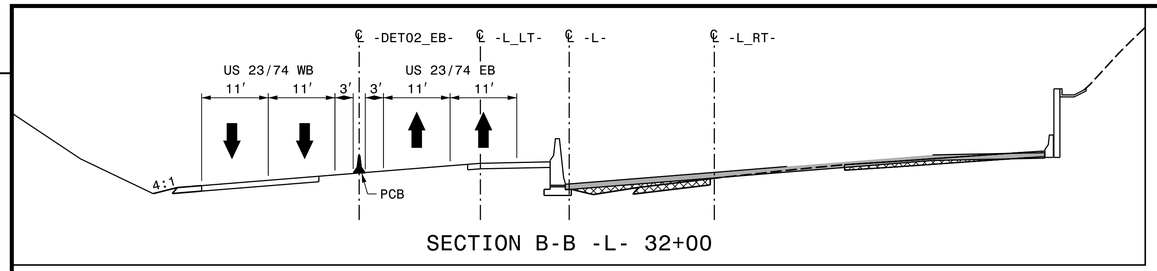

SECTION B-B -L- 32+00

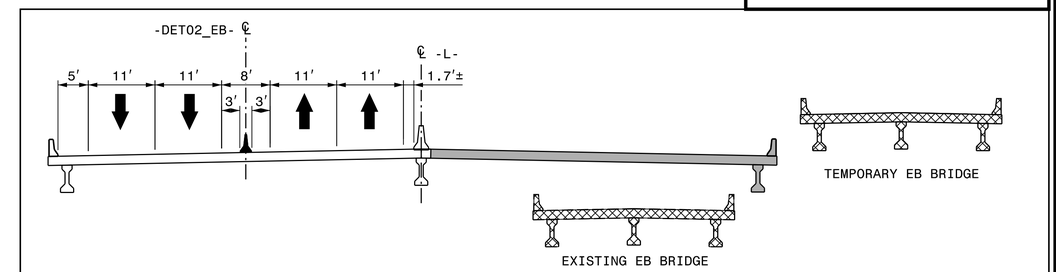

SECTION D-D -L- 43+00

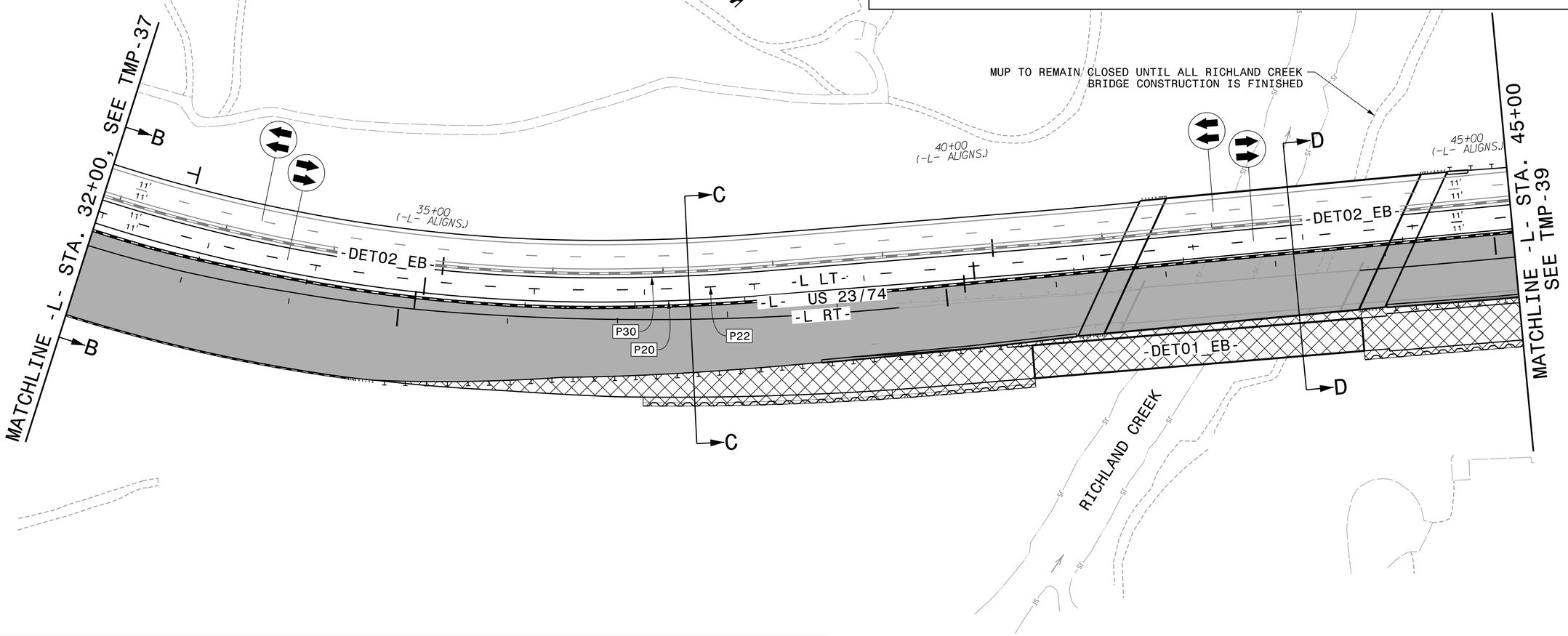

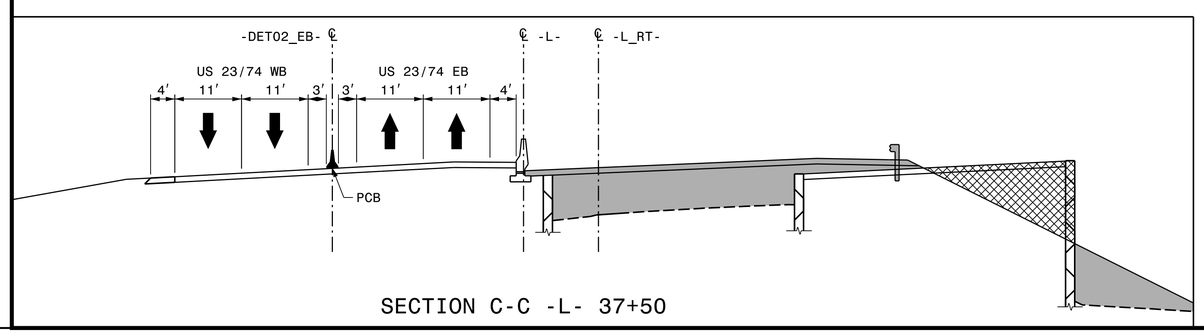

SECTION C-C -L- 37+50

APPROVED: Michael T. Rzepka

DATE: 3/17/2022

SEAL

NORTH CAROLINA PROFESSIONAL SEAL 15876 ENGINEER MICHAEL T. RZEPKA

DOCUMENT NOT CONSIDERED FINAL UNLESS ALL SIGNATURES COMPLETED

DIVISION OF HIGHWAYS · STATE OF NORTH CAROLINA · DEPARTMENT OF TRANSPORTATION · WORK ZONE TRAFFIC CONTROL

PHASE 3, STEP 2

REVISIONS

PLOT DRIVER: NCDOT_pdf_color_eng_50.plt PENTABLE: NCDOT_tcp.tbl
USER: CHARNDEN DATE: 1/21/2022 TIME: 4:10:45 PM
FILE: pw:\\pwhdrusea01:HDR_US_East_01\Documents\3322\10030389\6.0_CAD_BIM\6.2_Work_In_Progress\B-3186-B5898\Traffic\TrafficControl\TCP\B3186-B5898_TMP_TMP38.dgn