DocuSign Envelope ID: 82D57B34-DF79-4367-857B-900A01E32C48

| PROJ. REFERENCE NO. | SHEET NO. |
|---|---|
| B-3186 / B-5898 | TMP-31 |

HDR Engineering, Inc. of the Carolinas
555 Fayetteville St, Suite 900 Raleigh, N.C. 27601
N.C.B.E.L.S. License Number: F-0116

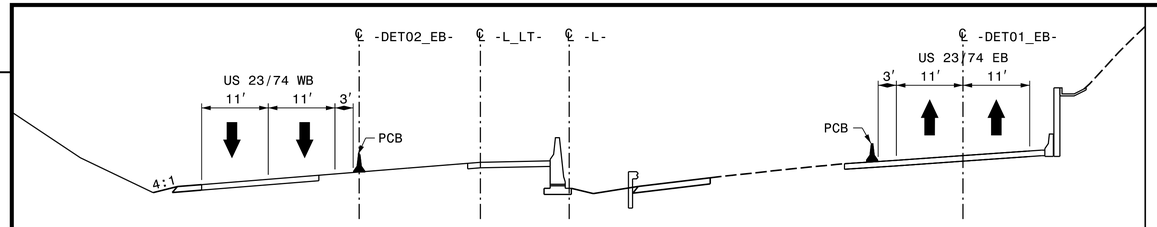


SECTION B-B -L- 32+00

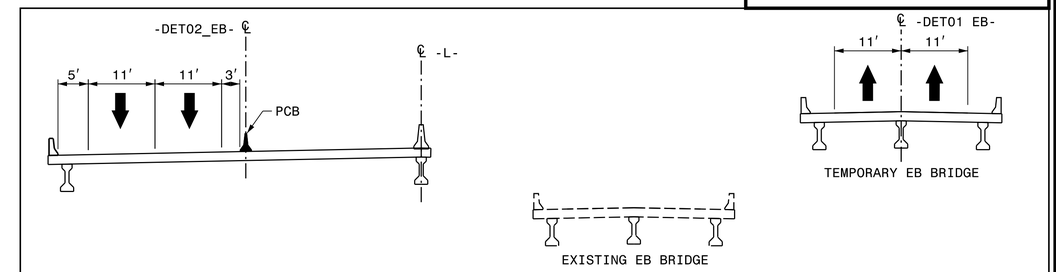


SECTION D-D -L- 43+00

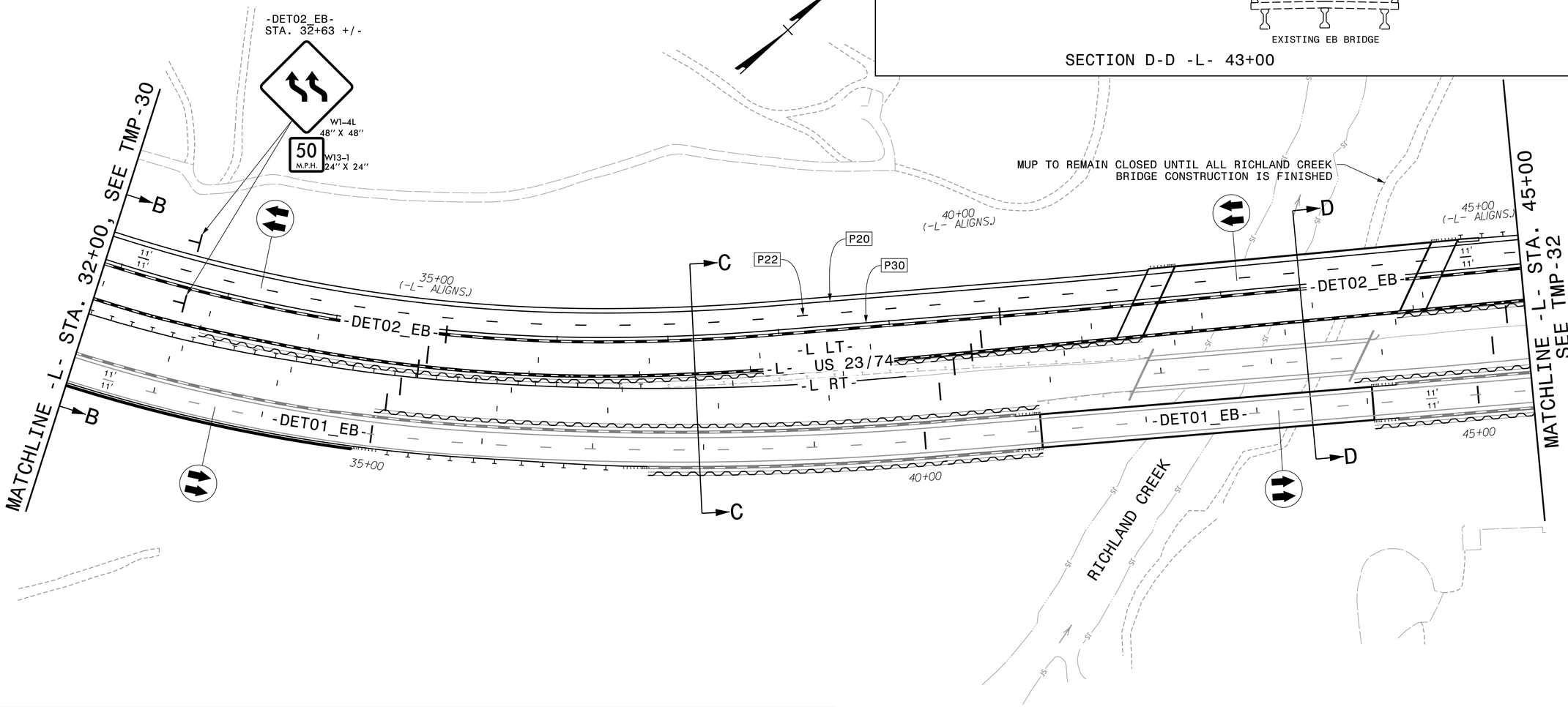


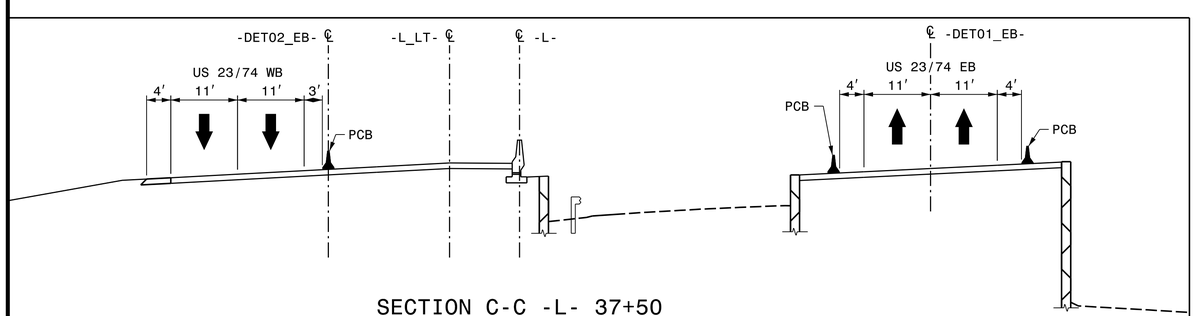


SECTION C-C -L- 37+50

APPROVED: Michael T. Rzepka

DATE: 3/17/2022

SEAL

NORTH CAROLINA PROFESSIONAL SEAL 15876 ENGINEER MICHAEL T. RZEPKA

**DOCUMENT NOT CONSIDERED FINAL UNLESS ALL SIGNATURES COMPLETED**

DIVISION OF HIGHWAYS · STATE OF NORTH CAROLINA · DEPARTMENT OF TRANSPORTATION · WORK ZONE TRAFFIC CONTROL

PHASE 3, STEP 1

REVISIONS

PLOT DRIVER: NCDOT_pdf_color_eng_50.plt PENTABLE: NCDOT_tcp.tbl
USER: CHARNDEN DATE: 1/21/2022 TIME: 4:08:21 PM
FILE: pw:\\pwhdruseas01:HDR_US_East_01\Documents\3322\10030389\6.0_CAD_BIM\6.2_Work_In_Progress\B-3186-B-5898\Traffic\TrafficControl\TCP\B3186-B5898_TMP_TMP31.dgn