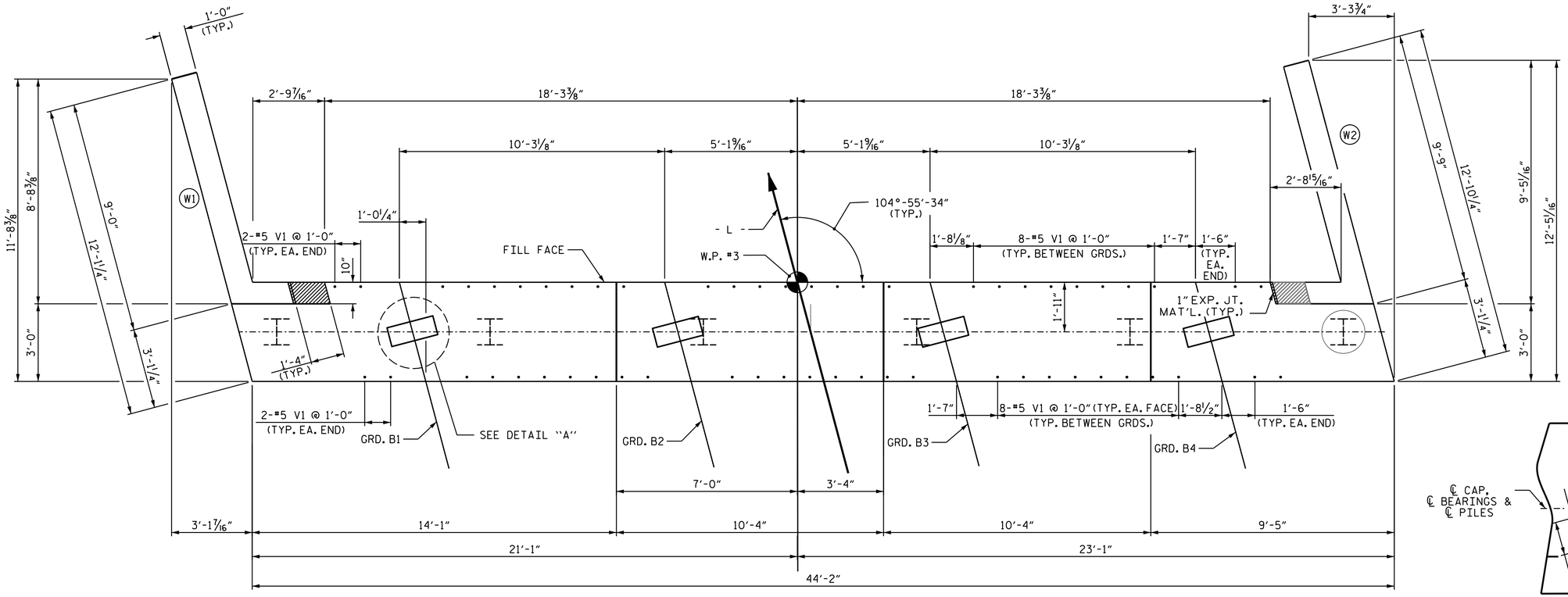

PLAN

NOTES:

STIRRUPS IN CAP MAY BE SHIFTED AS NECESSARY TO CLEAR #5 V1 BARS.

THE TOP PART OF THE END BENT CAP, EXCEPT THE BEARING AREA, SHALL BE RAKED TO A DEPTH OF 1/4".

THE CONCRETE IN THE SHADED AREA OF THE WING SHALL BE POURED AFTER PARAPET IS CAST IF SLIP FORMING IS USED.

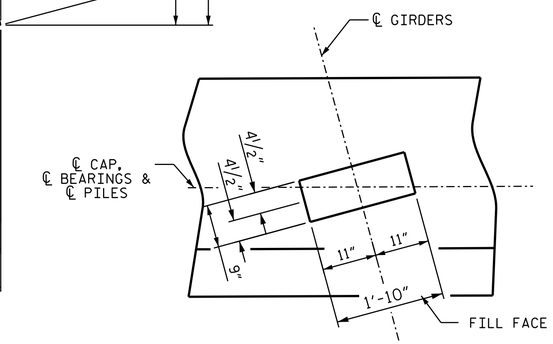

DETAIL "A"

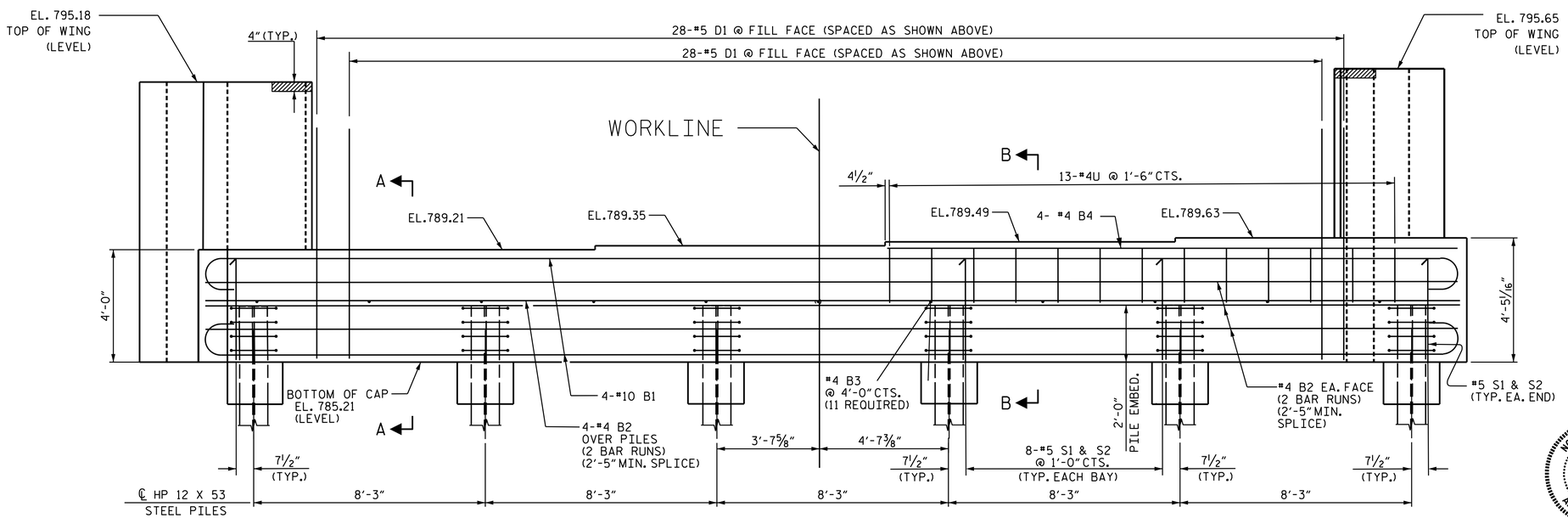

ELEVATION

(V BARS ARE NOT SHOWN FOR CLARITY)

PROJECT NO. BR-0051

YADKIN COUNTY

STATION: 18+34.78 -L-

SHEET 1 OF 3

STATE OF NORTH CAROLINA
DEPARTMENT OF TRANSPORTATION
RALEIGH

INTEGRAL END BENT 2

NORTH CAROLINA PROFESSIONAL SEAL 031021 ENGINEER AMBER M. LEE

DocuSigned by: B04B5A4F2FAD484...
04/25/2022

DOCUMENT NOT CONSIDERED FINAL UNLESS ALL SIGNATURES COMPLETED

REVISIONS								SHEET NO.
NO.	BY:	DATE:	NO.	BY:	DATE:			S-27
1			3					TOTAL SHEETS
2			4					32

DRAWN BY :	E.BAYISSA/C.RUIZ	DATE :	09/2020
CHECKED BY :	H.A. LOCKLEAR	DATE :	03/2022
DESIGN ENGINEER OF RECORD:	E. BAYISSA	DATE :	09/2019

4/25/2022
R:\Structures\OBD_FINAL PLANS\400_055_BR-0051_SMU_ E2_0027_980090.dgn
amlee