DocuSign Envelope ID: 519EE4D3-76F4-4E52-9CFE-31859139EC94

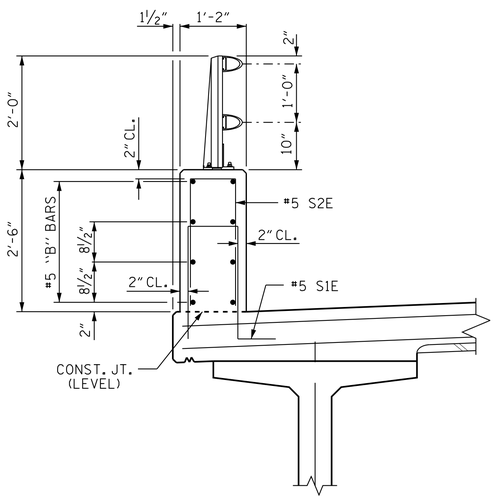

SECTION THRU PARAPET

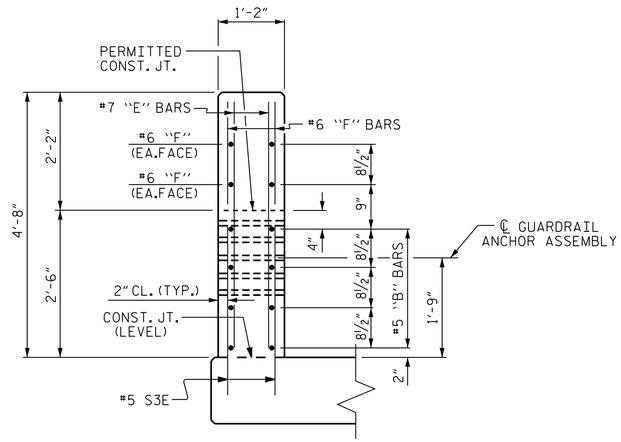

END VIEW

SECTION THRU PARAPET AND END POST

BAR TYPES

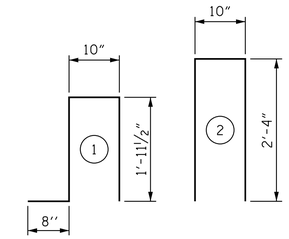

ALL BAR DIMENSIONS ARE OUT TO OUT

BILL OF MATERIAL

CONCRETE PARAPET AND FOUR END POSTS

BAR	NO.	SIZE	TYPE	LENGTH	WEIGHT	BAR	NO.	SIZE	TYPE	LENGTH	WEIGHT
B1E	72	5	STR	26'-6"	1,990	F12E	1	6	STR	2'-8"	4
B2E	4	5	STR	17'-6"	73	F13E	1	6	STR	3'-0"	5
B3E	4	5	STR	16'-8"	70	F14E	1	6	STR	1'-6"	2
B4E	4	5	STR	24'-6"	102	F15E	1	6	STR	1'-11"	3
B5E	4	5	STR	25'-5"	106	F16E	2	6	STR	3'-10"	12
B6E	72	5	STR	25'-6"	1,915	F17E	3	6	STR	3'-6"	16
B7E	4	5	STR	17'-4"	72	F18E	3	6	STR	4'-8"	21
B8E	4	5	STR	18'-2"	76	F19E	1	6	STR	3'-10"	6
B9E	4	5	STR	26'-10"	112	F20E	1	6	STR	2'-8"	4
B10E	4	5	STR	25'-11"	108	F21E	1	6	STR	2'-9"	4
B11E	4	5	STR	3'-9"	16	F22E	1	6	STR	1'-6"	2
B12E	4	5	STR	4'-6"	19	F23E	1	6	STR	1'-7"	2
B13E	4	5	STR	4'-9"	20	F24E	2	6	STR	3'-10"	12
B14E	4	5	STR	3'-9"	16	F25E	3	6	STR	4'-11"	22
B15E	4	5	STR	4'-6"	19	F26E	3	6	STR	3'-6"	16
B16E	4	5	STR	3'-9"	16	F27E	1	6	STR	2'-8"	4
B17E	4	5	STR	3'-9"	16	F28E	1	6	STR	4'-1"	6
B18E	4	5	STR	4'-8"	19	F29E	1	6	STR	1'-6"	2
						F30E	1	6	STR	3'-0"	5
E1E	56	7	STR	4'-4"	496	F31E	1	6	STR	1'-8"	3
E2E	8	7	STR	2'-4"	38	F32E	2	6	STR	3'-10"	12
E3E	8	7	STR	2'-10"	46						
E4E	8	7	STR	3'-4"	55	S1E	549	5	1	5'-5"	3,102
E5E	8	7	STR	3'-9"	61	S2E	549	5	2	5'-6"	3,149
						S3E	88	5	STR	3'-0"	275
F1E	3	6	STR	4'-9"	21						
F2E	3	6	STR	3'-6"	16						
F3E	1	6	STR	2'-7"	4						
F4E	1	6	STR	3'-11"	6						
F5E	1	6	STR	1'-6"	2						
F6E	1	6	STR	2'-9"	4						
F7E	1	6	STR	1'-6"	2						
F8E	2	6	STR	3'-10"	12						
F9E	3	6	STR	3'-6"	16						
F10E	3	6	STR	5'-0"	23						
F11E	1	6	STR	4'-2"	6						

EPOXY COATED REINFORCING STEEL	LBS.	12,262
CLASS AA CONCRETE	C.Y.	66.1
1'-2" X 2'-6" CONCRETE PARAPET		584.4 LF

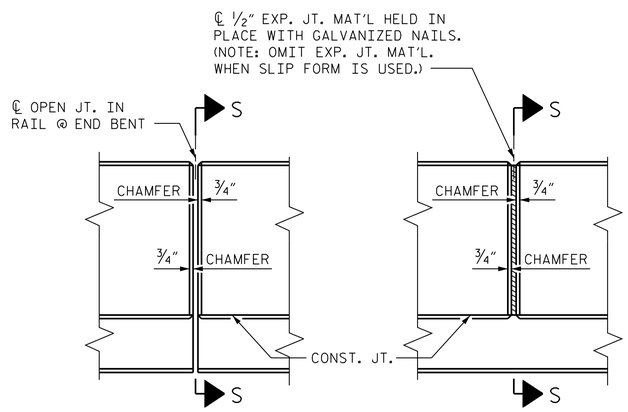

ELEVATION AT EXPANSION JOINTS

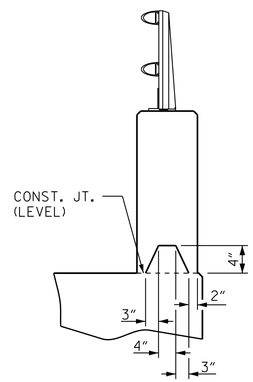

SECTION S-S

AT DAM IN OPEN JOINT
(THIS IS TO BE USED ONLY
WHEN SLIP FORM IS USED)

ELEVATION AT EXPANSION JOINTS

PROJECT NO. B-5301

PITT COUNTY

STATION: 25+98.05 -L-

SHEET 6 OF 6

STATE OF NORTH CAROLINA
DEPARTMENT OF TRANSPORTATION
RALEIGH

SUPERSTRUCTURE

CONCRETE PARAPET DETAILS

NORTH CAROLINA PROFESSIONAL SEAL 040769 ENGINEER ANDREW L. PHILLIPS

DocuSigned by: Andrew L. Phillips 2BB69ABAD4004D3... 4/6/2020

Kimley»Horn
421 Fayetteville Street, Suite 600
Raleigh, NC 27601-1772
Phone (919) 677-2000
NC LICENSE # F-0102

This document, together with the concepts and designs presented herein, as an instrument of services, is intended only for the specific purpose and client for which it was prepared. Reuse of and improper reliance on this document without written consent by Kimley-Horn and Associates, Inc. shall be without liability to Kimley-Horn and Associates, Inc.

Copyright Kimley-Horn and Associates, Inc., 2020

REVISIONS						SHEET NO.
NO.	BY:	DATE:	NO.	BY:	DATE:	S-31
1			3			TOTAL SHEETS
2			4			55

DOCUMENT NOT CONSIDERED FINAL UNLESS ALL SIGNATURES COMPLETED

DRAWN BY: D. D. LOWERY	DATE: 2/20	
CHECKED BY: C. T. POOLE	DATE: 2/20	
DESIGN ENGINEER OF RECORD: A. L. PHILLIPS	DATE: 2/20	

4/3/2020

C:\Users\andrew.phillips\KHA\Raleigh Bridge - Documents\B-5301\Cad\Dgn\401_061_B5301_SMU_CP06_031_730087.dgn