DocuSign Envelope ID: 3D000C6F-7834-4A52-89A9-EFFC34C57365

PROJECT REFERENCE NO.	SHEET NO.
U-5710A	2C-2

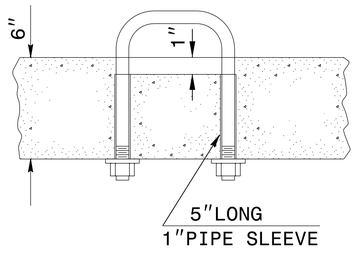

PARTIAL SECTION

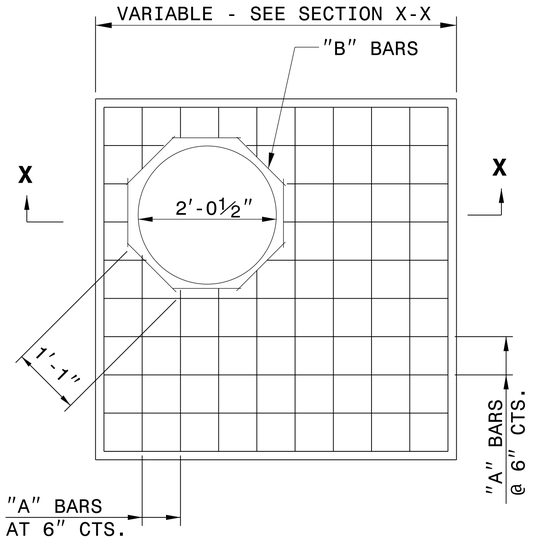

PLAN

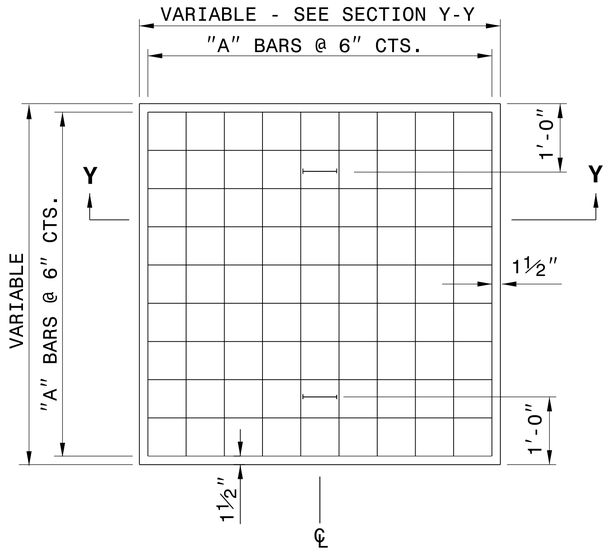

PLAN

GENERAL NOTES:

CONSTRUCT IN ACCORDANCE WITH SECTION 859 OF THE STANDARD SPECIFICATIONS.

THE DIMENSIONS FOR THE EXISTING BOXES ARE APPROXIMATE AND MAY VARY SLIGHTLY.

DETAIL INTENDED FOR NON-TRAFFIC BEARING DRAINAGE STRUCTURES.

BILL OF MATERIALS

REINFORCING STEEL				
CODE	SIZE	QTY.	LENGTH	REINF. STEEL LBS.
A	#4	20	4'-6"	60.12
B	#4	8	1'-1"	5.79
TOTAL				65.91 *

MASONRY	CU YDS
TOP SLAB CONCRETE CLASS "B"	.4326 *
BRICK MASONRY PER FT HT (MIN)	.4111

* NOTE:
QUANTITIES BASED ON 3'-6" X 3'-6" DRAINAGE STRUCTURE. ADJUST QUANTITIES FOR LARGER STRUCTURES AND MANHOLE CONSTRUCTION.

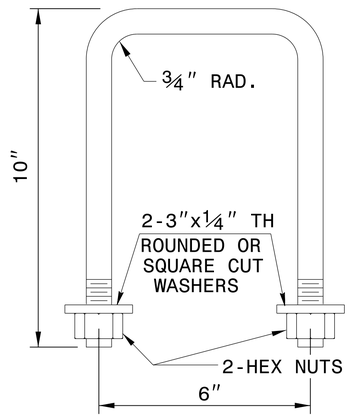

DETAIL OF HANDLE

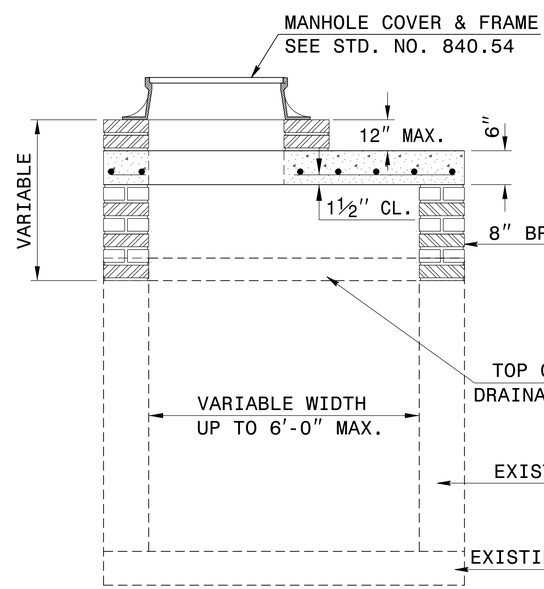

SECTION X-X

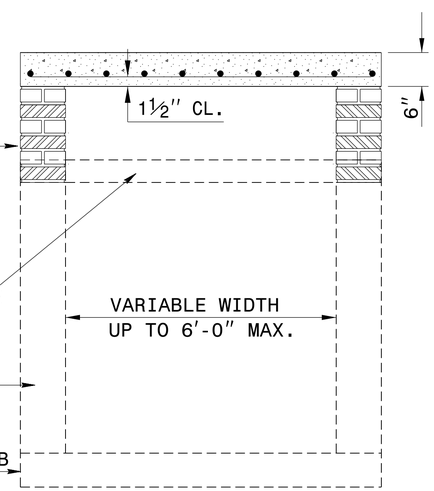

SECTION Y-Y

4/4/2022

DOCUMENT NOT CONSIDERED FINAL UNLESS ALL SIGNATURES COMPLETED

CONTRACT STANDARDS AND DEVELOPMENT UNIT
Office 919-707-6950 FAX 919-250-4119

DETAIL TO CONVERT EXISTING DI, CB, OTCB or GI TO JUNCTION BOX (MANHOLE OPTIONAL)

ORIGINAL BY: T.S.S. DATE: NOV.1997
MODIFIED BY: T.S.S. DATE: FEB.2000
CHECKED BY: DATE:
FILE SPEC.: ds174:/usr/details/stand/boxtojbe.dgn