DocuSign Envelope ID: 777C7FA7-706E-45EB-9E43-555C392EABD6

5/14/99

PROJECT WATER DETAILS

PREPARED IN THE OFFICE OF:

THE WOOTEN COMPANY
301 West 14th Street Greenville NC 27834
252.757.1096 fax 252.757.3221
License Number: F-1015

VERTICAL SCALE	HORIZONTAL SCALE
5' 0 5' 10'	25' 0 25' 50'

WATER LINE CONSTRUCTION SHOWN ON THIS SHEET

PROJECT REFERENCE NO.	SHEET NO.
R-4705	UC-3B

DESIGNED BY: DCS
DRAWN BY: BTH
CHECKED BY: DCS
APPROVED BY: DCS
REVISED: 3-18-2022

NORTH CAROLINA DEPARTMENT OF TRANSPORTATION

UTILITIES ENGINEERING SEC.
PHONE: (919) 707-6690
FAX: (919) 250-4151

NORTH CAROLINA PROFESSIONAL ENGINEER SEAL 33203 DERRICK C. SMITH 4/29/2022

Document Not Considered Final Unless All Signatures Completed
UTILITY CONSTRUCTION PLANS ONLY

FINAL PLANS
RELEASED FOR CONSTRUCTION

UTILITY CONSTRUCTION

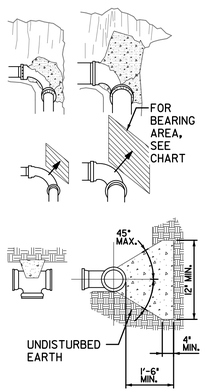

MINIMUM CONCRETE BLOCKING (C.Y.)					
NOM. PIPE (I.D.)	TEES & DEAD ENDS	90° BEND	45° BEND	22 1/2° BEND	11 1/4° BEND
4	.34	.34	.34	.34	.34
6	.34	.34	.34	.34	.34
8	.34	.50	.34	.34	.34
10	.67	.75	.50	.34	.34
12	.75	1.0	.67	.34	.34
14	1.0	1.5	.75	.50	.34
16	1.34	2.0	1.0	.50	.34
18	1.67	2.34	1.34	.67	.34
20	2.0	3.0	1.67	.75	.50
24	3.0	4.34	2.34	1.34	.67

NOTES:
-CONCRETE SHALL BE 3000 P.S.I. MIX.
-NO CONCRETE SHALL COVER BOLTS OR GLANDS.
-PROVIDE 10 MIL POLYETHYLENE AROUND PIPE TO PREVENT CONCRETE FROM BONDING TO PIPE.

STANDARD REACTION BLOCKING

NOT TO SCALE

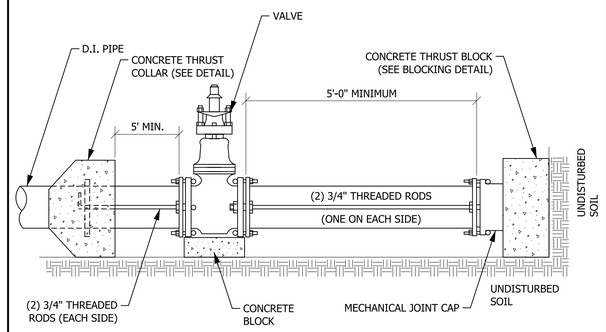

NOTE:
THIS DETAIL SHALL APPLY TO PERMANENT AND TEMPORARY CAPPING UNLESS SHOWN OTHERWISE ON PLAN.

STANDARD CAPPING DETAIL

NOT TO SCALE

SQ. FT. BEARING AREA					
FITTING	4"	6"	8"	12"	16"
90° BEND	3	5	7	10	16
D.E. OR TEE	2	3	5	8	11
45° OR LESS	1	2	4	6	8

EXCAVATE AS NEARLY VERTICAL AS POSSIBLE

PROVIDE 4 MIL POLYETHYLENE AROUND PIPE TO PREVENT CONCRETE FROM BONDING TO PIPE

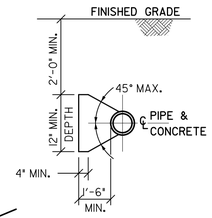

SECTION "A-A"

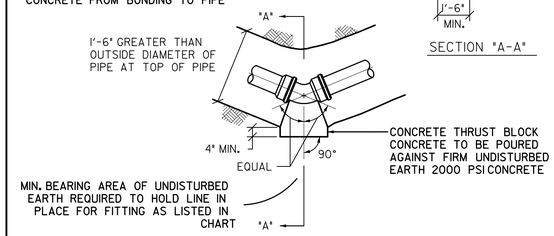

THRUST BLOCK FOR HORIZONTAL PIPE BENDS

NOT TO SCALE

1. 6" x 6" TEE
2. 6" GATE VALVE
2A. 4" GATE VALVE
3. 6" x 4" REDUCER
4. 4" CHECK VALVE
5. 4" METER
6. 4" STRAINER
7. HOSE BIBB
8. (4) ¾" DIA. THRUST RODS
9. ¾" STEEL THRUST FLANGE (2 REQ'D. PER ROD)
10. STYLE 38 DRESSER COUPLING OR EQUAL
11. 4" x 4" TEE
12. SUBMERSIBLE SUMP PUMP TO GRADE WITH CI FLOOR GRATING
13. 2'-0"x2'-0" PRECAST CONC SPLASH PAD
14. 6" DIA WALL BOOT SEAL (TYP)
15. 8" MIN NCDOT #57 STONE
16. PIPE SUPPORTS (TYP OF 3)
17. 48"x72" STEEL ACCESS HATCH
18. PVC SUMP DRAIN PIPE
19. 6" CRUSHED STONE

NOTE:
ALL PIPE SHALL BE RESTRAINED JOINT

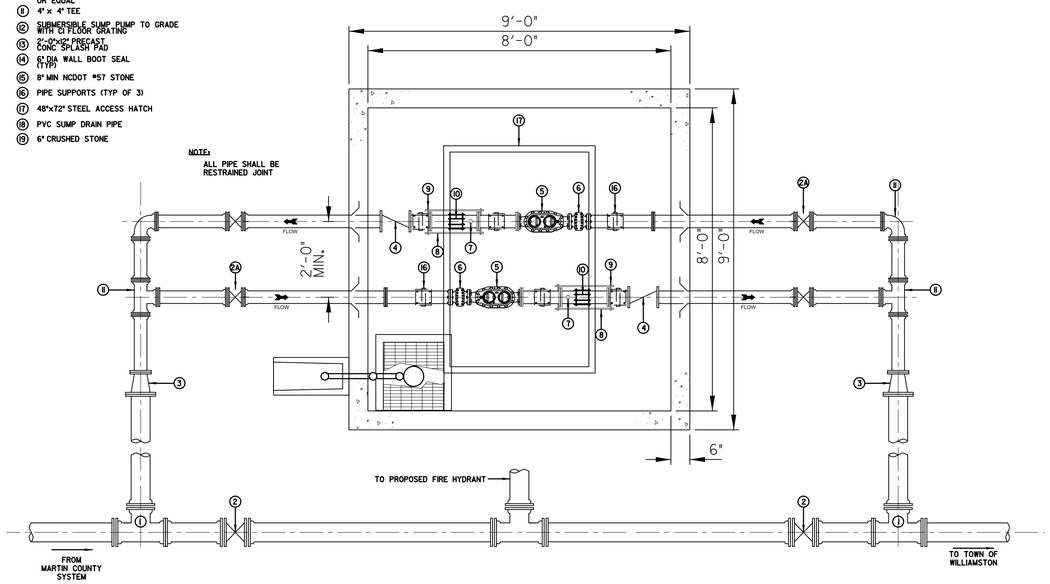

PROPOSED UTILITY VAULT - PLAN

1/2" = 1'-0"

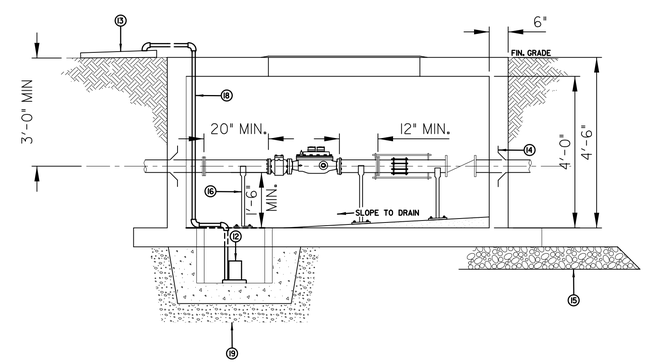

PROPOSED UTILITY VAULT - SECTION

1/2" = 1'-0"

DocuSign Envelope Id: 777C7FA7-706E-45EB-9E43-555C392EABD6