DocuSign Envelope ID: 4859BB28-D2FE-4788-950B-1D85A8516E30

8/17/99

REVISIONS

WETHERILL ENGINEERING
1223 Jones Franklin Rd.
Raleigh, N.C. 27606
License No. F-0377
Bus: 919 851 8077
Fax: 919 851 8107
TRANSPORTATION PLANNING/DESIGN - BRIDGE/STRUCTURE DESIGN
CIVIL/SITE DESIGN - GIS/GPS - CONSTRUCTION OBSERVATION

PROJECT REFERENCE NO.	SHEET NO.
R-4705	24
R/W SHEET NO.	

ROADWAY DESIGN ENGINEER
4/7/2022
NORTH CAROLINA PROFESSIONAL SEAL 21116 ENGINEER ROB A. MAY

HYDRAULICS ENGINEER
4/7/2022
NORTH CAROLINA PROFESSIONAL SEAL 053425 ENGINEER MATTHEW L. BARNETT

DOCUMENT NOT CONSIDERED FINAL UNLESS ALL SIGNATURES COMPLETED

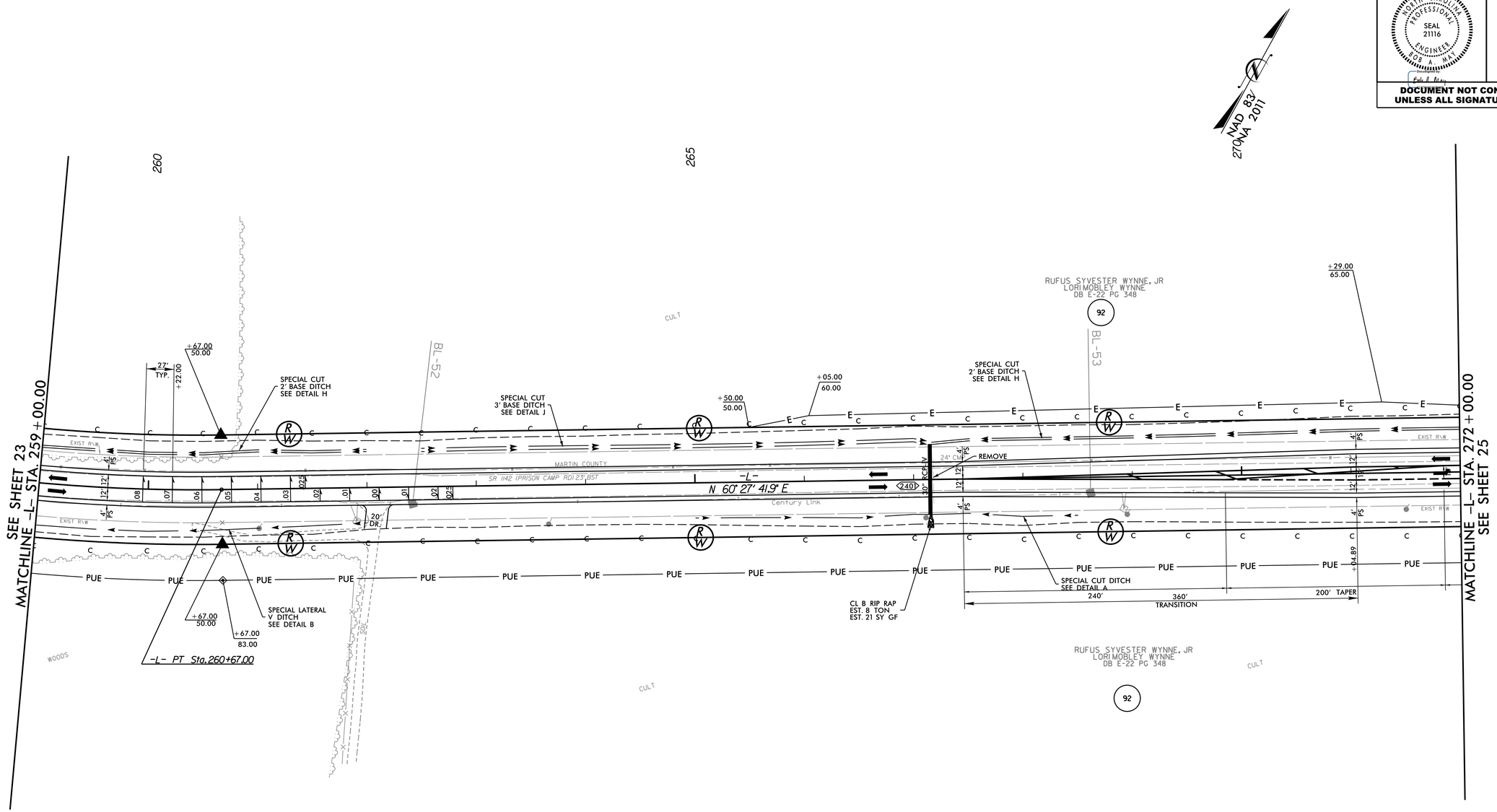

SEE SHEET 2D-1 FOR DITCH DETAILS
SEE SHEET 53 & 54 FOR -L- PROFILE

3/17/2022
R:\Projects\R4705_Rdy_psh_24.dgn
USERRMN