DocuSign Envelope ID: 2AD1449B-C1F3-4078-88A7-D2AACDD998A5

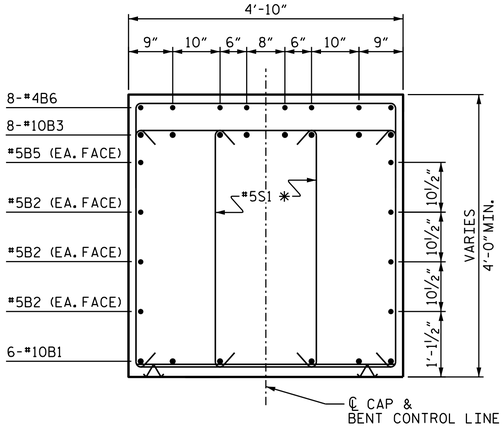

SECTION A-A

✳INVERT ALTERNATE PAIR OF STIRRUPS BETWEEN COLUMNS

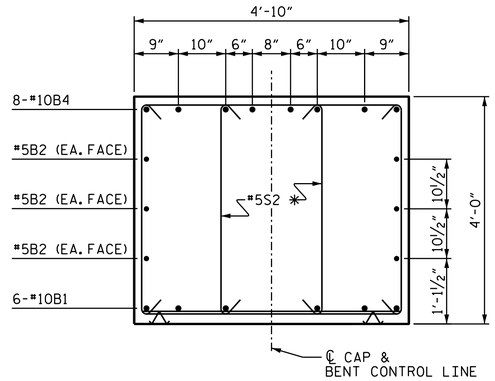

SECTION B-B

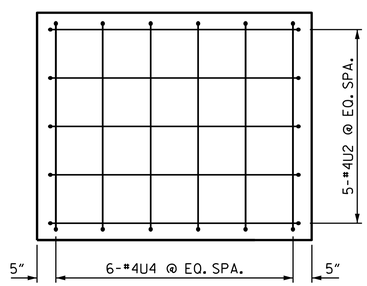

LEFT CAP END VIEW

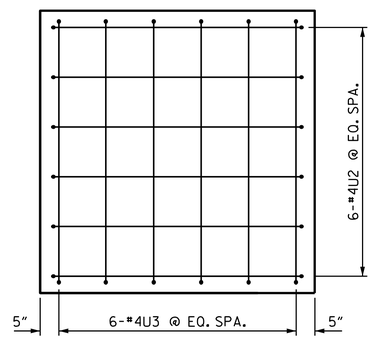

RIGHT CAP END VIEW

BAR TYPES

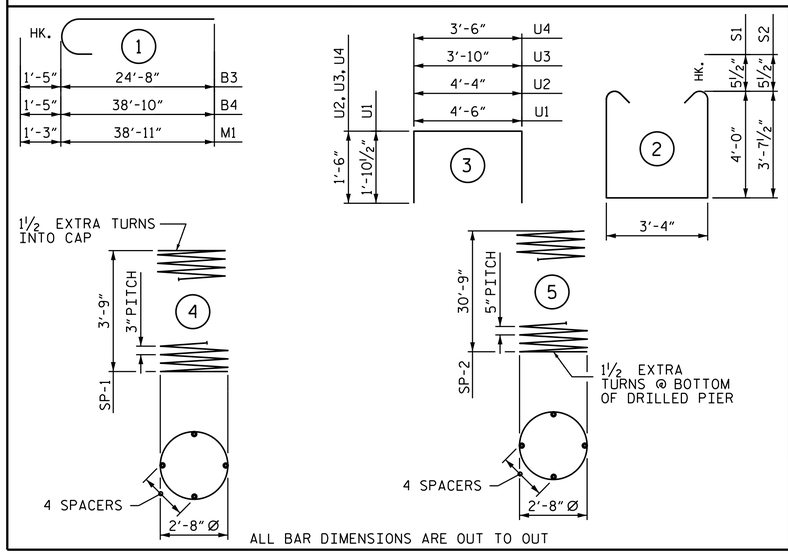

ALL BAR DIMENSIONS ARE OUT TO OUT

BILL OF MATERIAL

BENT 1

BAR	NO.	SIZE	TYPE	LENGTH	WEIGHT
B1	6	#10	STR	44'-8"	1153
B2	6	#5	STR	44'-8"	280
B3	8	#10	1	26'-1"	898
B4	8	#10	1	40'-3"	1386
B5	2	#5	STR	10'-5"	22
B6	8	#4	STR	4'-8"	25
B7	5	#4	STR	4'-6"	15
M1	36	#9	1	40'-2"	4916
S1	54	#5	2	12'-3"	690
S2	46	#5	2	11'-6"	552
U1	50	#4	3	8'-3"	276
U2	11	#4	3	7'-4"	54
U3	6	#4	3	6'-10"	27
U4	6	#4	3	6'-6"	26
REINFORCING STEEL					10,320 LBS.
SP-1	3	✳	4	135'-10"	272
SP-2	3	✳✳	5	618'-1"	1934
SPIRAL COLUMN REINFORCING STEEL					2,206 LBS.

✳ THE SP-1 SPIRAL REINFORCING STEEL SHALL BE W20 OR D-20 COLD DRAWN WIRE OR #4 PLAIN OR DEFORMED BAR

✳✳ THE SP-2 SPIRAL REINFORCING STEEL SHALL BE W31 OR D-31 COLD DRAWN WIRE OR #5 PLAIN OR DEFORMED BAR

CLASS A CONCRETE BREAKDOWN	
POUR #2 (COLUMNS)	2.8 C.Y.
POUR #3 (CAP)	35.0 C.Y.
TOTAL CLASS A CONCRETE	37.8 C.Y.

DRILLED PIERS:	
DRILLED PIER CONCRETE POUR #1 (DRILLED PIERS)	33.5 C.Y.
3'-6" Ø DRILLED PIERS IN SOIL	58.75 LIN. FT.
3'-6" Ø DRILLED PIERS NOT IN SOIL	35 LIN. FT.
CSL TUBES	393 LIN. FT.
PERM. STEEL CASING FOR 42" Ø DRILLED PIER	60.0 LIN. FT.

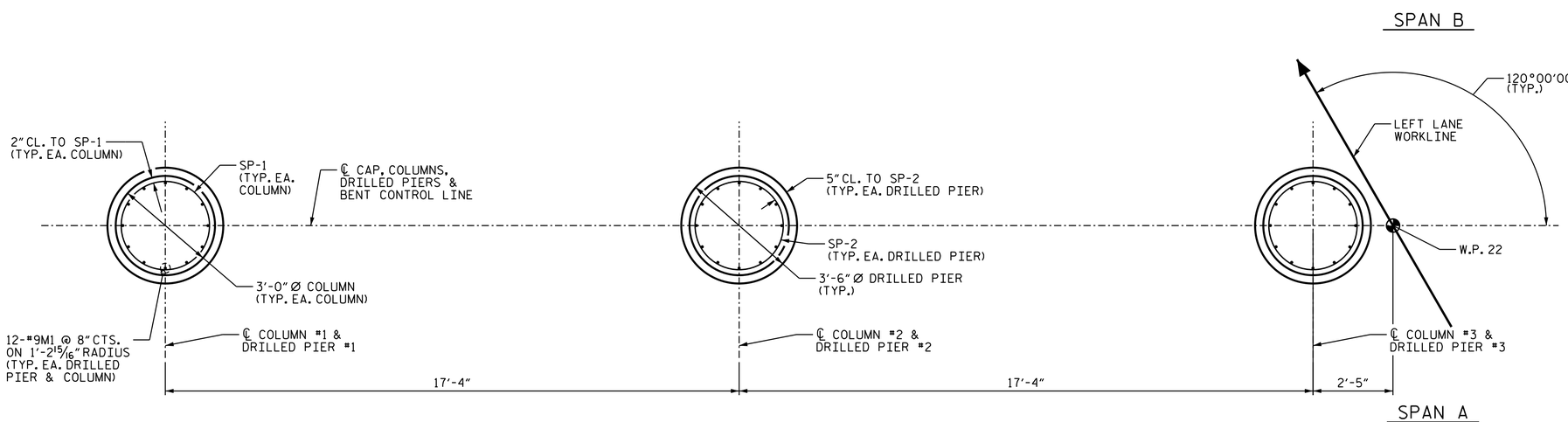

PLAN OF DRILLED PIERS AND COLUMNS

PROJECT NO. B-5717

GUILFORD COUNTY

STATION: 21+22.00 -L-

SHEET 2 OF 2

AECOM
AECOM TECHNICAL SERVICES OF NC, INC.
5438 WADE PARK BOULEVARD, SUITE 200
RALEIGH, NC 27607
(919) 854-6200 www.aecom.com
AECOM License No. F-0342

NORTH CAROLINA PROFESSIONAL SEAL 043242 ENGINEER SWETHA NATARAJAN
DocuSigned by: Swetha Natarajan
B605...
4/8/2022

STATE OF NORTH CAROLINA
DEPARTMENT OF TRANSPORTATION
RALEIGH

SUBSTRUCTURE

BENT 1

(LEFT LANE)

REVISIONS							SHEET NO.
NO.	BY:	DATE:	NO.	BY:	DATE:		S2-30
1			3				TOTAL SHEETS
2			4				38

DRAWN BY :	B.D. HODACK	DATE :	07/2021
CHECKED BY :	S. NATARAJAN	DATE :	08/2021
DESIGNED BY :	S. NATARAJAN	DATE :	06/2021
DESIGN CHECKED BY :	G.R. COLS	DATE :	06/2021

DOCUMENT NOT CONSIDERED FINAL UNLESS ALL SIGNATURES COMPLETED

DATE: 3/31/2022
TIME: 3:59:13 PM

USER: danfield1um
DGN: pw:\\aecom-na-pw.bentley.com:AECOM_DS2_NA_2020\Documents\60159287-NCDOT SMU B-5717\900-CAD GISWG_CADVTO_NCDOT_TIP\Structures\04 Drawings\402_059_B-5717_SMU_BR02_S2-30_400021.dgn