DocuSign Envelope ID: F11281C6-110E-4D30-A543-7F25B478AC12

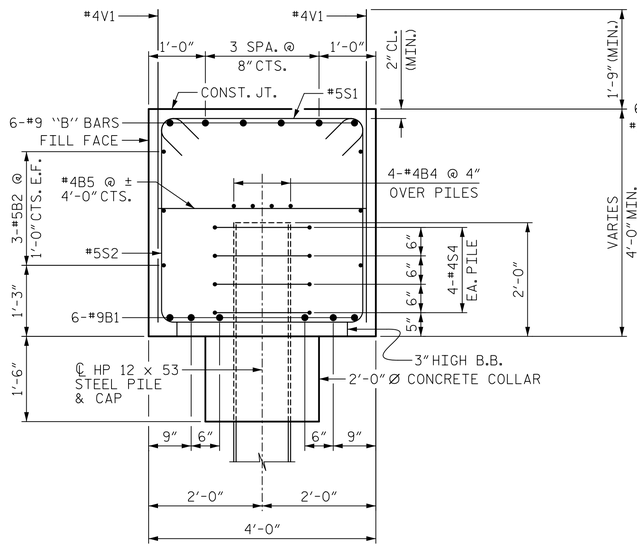

SECTION A-A

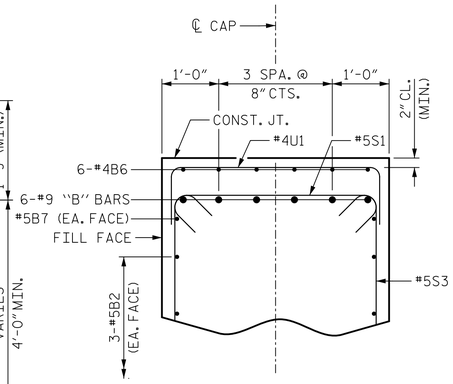

SECTION B-B

BAR TYPE

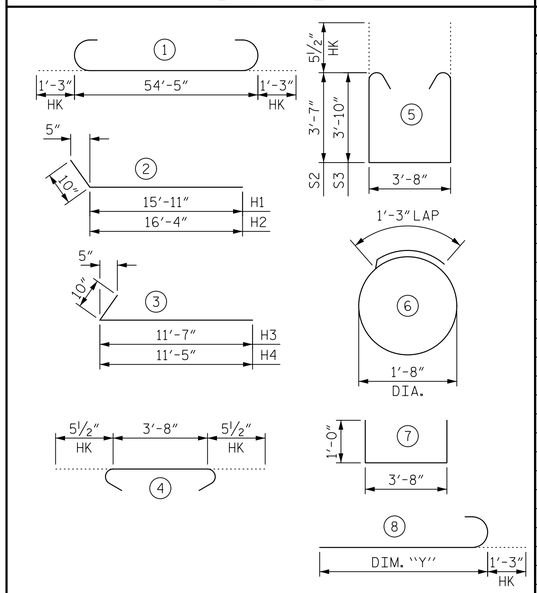

BAR	DIM. "Y"
B3	25'-11"
B14	39'-4"
B15	38'-10"
B16	38'-5"
B17	38'-1"
B18	37'-8"
B19	37'-2"

ALL BAR DIMENSIONS ARE OUT TO OUT.

BILL OF MATERIAL

INTEGRAL END BENT 2

BAR	NO.	SIZE	TYPE	LENGTH	WEIGHT
B1	6	9	1	56'-11"	1161
B2	6	5	STR	54'-5"	341
B3	6	9	8	27'-2"	554
B4	8	4	STR	28'-6"	152
B5	14	4	STR	3'-8"	34
B6	12	4	STR	9'-11"	79
B7	2	5	STR	31'-5"	66
B8	1	4	STR	9'-1"	6
B9	1	4	STR	8'-7"	6
B10	1	4	STR	8'-2"	5
B11	1	4	STR	7'-10"	5
B12	1	4	STR	7'-5"	5
B13	1	4	STR	6'-11"	5
B14	1	9	8	40'-7"	138
B15	1	9	8	40'-1"	136
B16	1	9	8	39'-8"	135
B17	1	9	8	39'-4"	134
B18	1	9	8	38'-11"	132
B19	1	9	8	38'-5"	131
H1	12	6	2	16'-9"	302
H2	12	6	2	17'-2"	309
H3	13	5	3	12'-5"	168
H4	13	5	3	12'-3"	166
H5	20	6	STR	19'-5"	583
H6	16	5	STR	14'-11"	249
K1	24	4	STR	3'-1"	49
K2	26	4	STR	3'-0"	52
S1	62	5	4	4'-7"	296
S2	19	5	5	11'-9"	233
S3	43	5	5	12'-3"	549
S4	32	4	6	6'-6"	139
U1	19	4	7	5'-8"	72
V1	72	4	STR	6'-7"	317
V2	42	5	STR	10'-7"	464
V3	32	5	STR	9'-11"	331

REINFORCING STEEL 7,504 LBS.

CLASS A CONCRETE

POUR #1 (CAP, COLLARS & LOWER WINGWALLS) 41.7 C.Y.

POUR #2 (UPPER WINGWALL) 7.6 C.Y.

TOTAL = 49.3 C.Y.

HP 12x53 STEEL PILES:

NO. = 8 LIN. FT. = 200

PILE DRIVING EQUIPMENT SETUP FOR HP 12x53 STEEL PILES 8 EA.

STEEL PILE POINTS 8 EA.

1

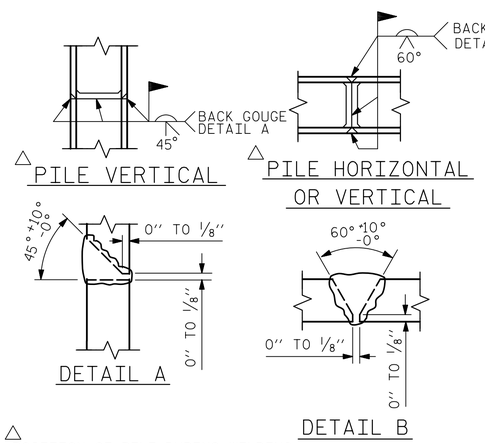

△ POSITION OF PILE DURING WELDING.

PILE SPLICE DETAILS

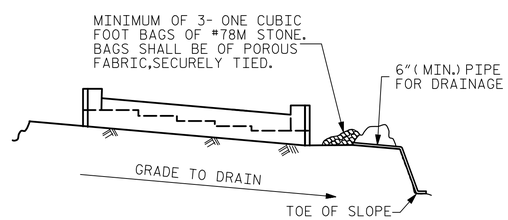

BAGGED STONE AND PIPE SHALL BE PLACED IMMEDIATELY AFTER COMPLETION OF END BENT EXCAVATION. PIPE MAY BE EITHER CONCRETE, CORRUGATED STEEL, CORRUGATED ALUMINUM ALLOY, OR CORRUGATED PLASTIC. PERFORATED PIPE WILL NOT BE ALLOWED.

BAGGED STONE SHALL REMAIN IN PLACE UNTIL THE ENGINEER DIRECTS THAT IT BE REMOVED. THE CONTRACTOR SHALL REMOVE AND DISPOSE OF SILT ACCUMULATIONS AT BAGGED STONE WHEN SO DIRECTED BY THE ENGINEER. BAGS SHALL BE REMOVED AND REPLACED WHENEVER THE ENGINEER DETERMINES THAT THEY HAVE DETERIORATED AND LOST THEIR EFFECTIVENESS.

NO SEPARATE PAYMENT WILL BE MADE FOR THIS WORK AND THE ENTIRE COST OF THIS WORK SHALL BE INCLUDED IN THE UNIT CONTRACT PRICE BID FOR THE SEVERAL PAY ITEMS.

TEMPORARY DRAINAGE AT END BENT

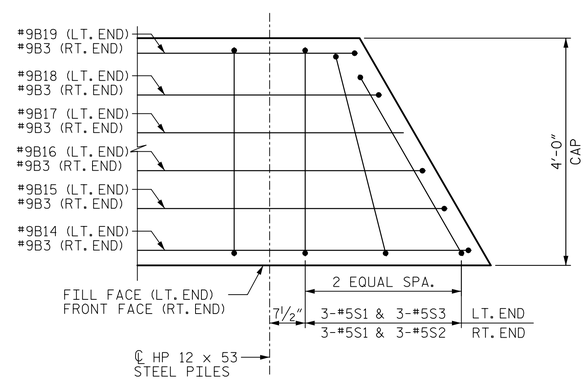

SPLAYED BAR DETAIL

PLAN VIEW SHOWN AT LEFT END, RIGHT END SIMILAR BY ROTATION.

1 REVISION #1:
REMOVED PREDRILLING FOR PILES PAY ITEM.

DRAWN BY : D.R. DRUM	DATE : 05/2021		
CHECKED BY : S. NATARAJAN	DATE : 08/2021		
DESIGNED BY : D.R. DRUM	DATE : 05/2021		
DESIGN CHECKED BY : S. NATARAJAN	DATE : 05/2021		

DOCUMENT NOT CONSIDERED FINAL UNLESS ALL SIGNATURES COMPLETED

AECOM
AECOM TECHNICAL SERVICES OF NC, INC.
5438 WADE PARK BOULEVARD, SUITE 200
RALEIGH, NC 27607
(919) 854-6200 www.aecom.com
AECOM License No. F-0342

NORTH CAROLINA PROFESSIONAL SEAL 043242 ENGINEER SWETHA NATARAJAN
DocuSigned by: Swetha Natarajan, PE
6/9/2022

PROJECT NO. B-5717
GUILFORD COUNTY
STATION: 21+22.00 -L-

SHEET 3 OF 3

STATE OF NORTH CAROLINA
DEPARTMENT OF TRANSPORTATION
RALEIGH

SUBSTRUCTURE

INTEGRAL END BENT 2

(RIGHT LANE)

REVISIONS						SHEET NO.
NO.	BY:	DATE:	NO.	BY:	DATE:	S1-35
1	SN	6-9-22	3			TOTAL SHEETS
2			4			38

USER: gregorycole
DGN: pw:\\aecom-na-pw.bentley.com:AECOM_DS2_NA_2020\Documents\60592827-NCDOT SMU B-5717\800-CAD 60\900_CAD\70_NCDOT_TIP\Structures\04 Drawings\40_069_B-5717_SMU_E203_S1-35_400(03).dgn
DATE: 6/9/2022
TIME: 11:45:57 AM