DocuSign Envelope ID: F11281C6-110E-4D30-A543-7F25B478AC12

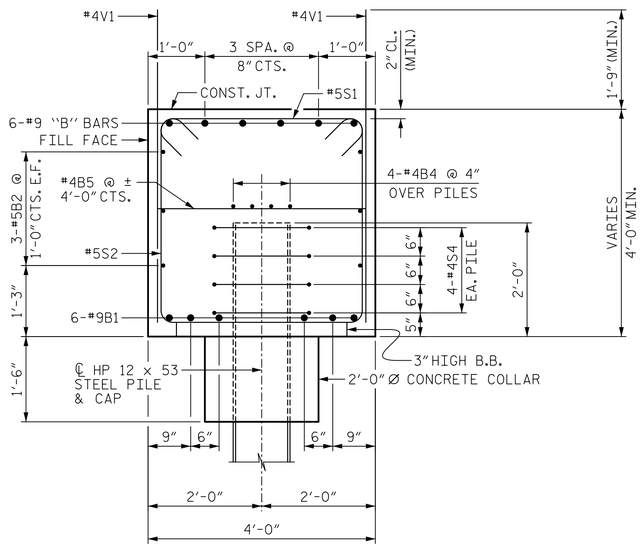

SECTION A-A

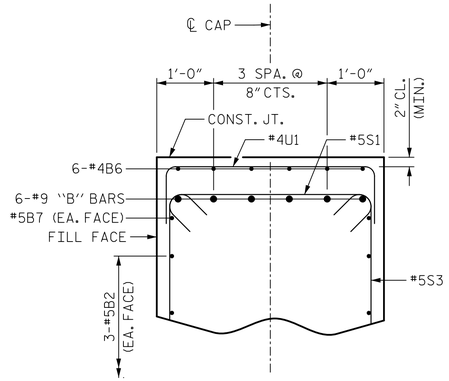

SECTION B-B

BAR TYPE

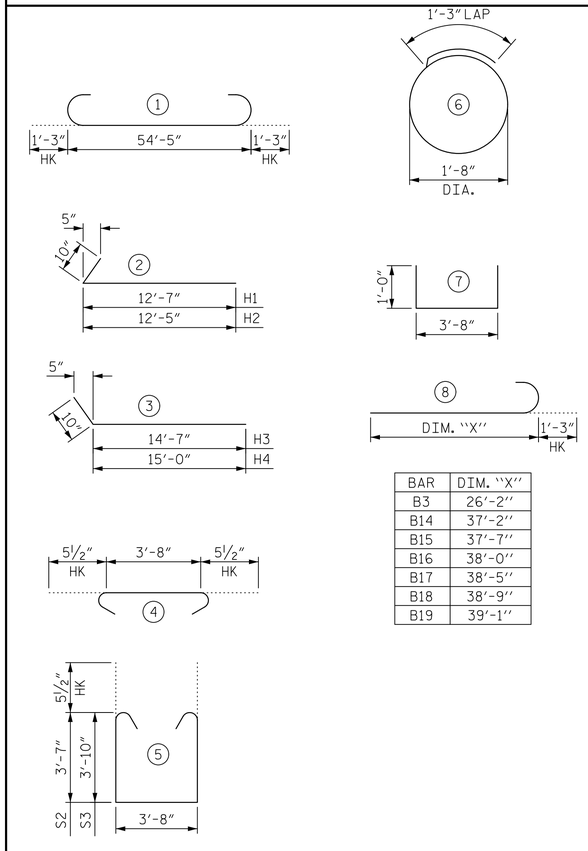

BAR	DIM. "X"
B3	26'-2"
B14	37'-2"
B15	37'-7"
B16	38'-0"
B17	38'-5"
B18	38'-9"
B19	39'-1"

ALL BAR DIMENSIONS ARE OUT TO OUT.

BILL OF MATERIAL

INTEGRAL END BENT 1

BAR	NO.	SIZE	TYPE	LENGTH	WEIGHT
B1	6	9	1	56'-11"	1161
B2	6	5	STR	54'-5"	341
B3	6	9	8	27'-5"	559
B4	8	4	STR	28'-6"	152
B5	14	4	STR	3'-8"	34
B6	12	4	STR	9'-11"	79
B7	2	5	STR	31'-5"	66
B8	1	4	STR	6'-11"	5
B9	1	4	STR	7'-4"	5
B10	1	4	STR	7'-9"	5
B11	1	4	STR	8'-2"	5
B12	1	4	STR	8'-6"	6
B13	1	4	STR	8'-10"	6
B14	1	9	8	38'-5"	131
B15	1	9	8	38'-10"	132
B16	1	9	8	39'-3"	133
B17	1	9	8	39'-8"	135
B18	1	9	8	40'-0"	136
B19	1	9	8	40'-4"	137
H1	12	6	2	13'-5"	242
H2	12	6	2	13'-3"	239
H3	13	6	3	15'-5"	301
H4	13	6	3	15'-10"	309
H5	20	6	STR	15'-11"	478
H6	16	6	STR	18'-1"	435
K1	24	4	STR	3'-0"	48
K2	26	4	STR	3'-1"	54
S1	62	5	4	4'-7"	296
S2	19	5	5	11'-9"	233
S3	43	5	5	12'-3"	549
S4	32	4	6	6'-6"	139
U1	19	4	7	5'-8"	72
V1	72	4	STR	6'-7"	317
V2	34	5	STR	10'-7"	375
V3	38	5	STR	9'-11"	393

REINFORCING STEEL 7,708 LBS.

CLASS A CONCRETE

POUR #1 (CAP, COLLARS & LOWER WINGWALLS) 41.5 C.Y.

POUR #2 (UPPER WINGWALL) 7.5 C.Y.

TOTAL = 49.0 C.Y.

HP 12x53 STEEL PILES:

NO. = 8 LIN. FT. = 200

PILE DRIVING EQUIPMENT SETUP FOR HP 12x53 STEEL PILES 8 EA.

STEEL PILE POINTS 8 EA.

1

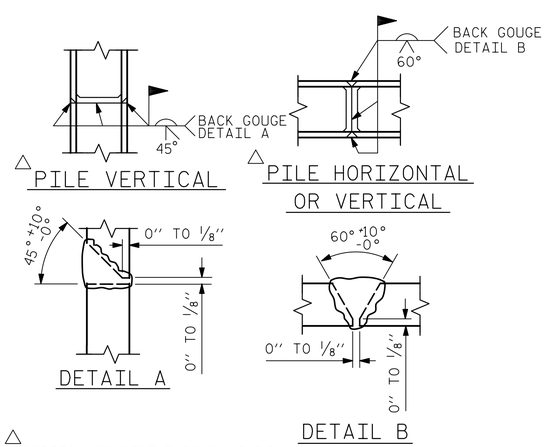

△ POSITION OF PILE DURING WELDING.

PILE SPLICE DETAILS

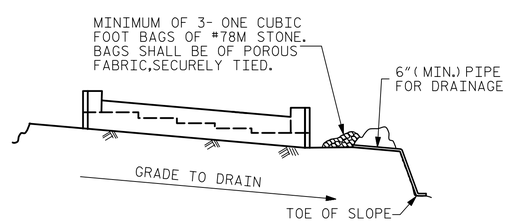

BAGGED STONE AND PIPE SHALL BE PLACED IMMEDIATELY AFTER COMPLETION OF END BENT EXCAVATION. PIPE MAY BE EITHER CONCRETE, CORRUGATED STEEL, CORRUGATED ALUMINUM ALLOY, OR CORRUGATED PLASTIC. PERFORATED PIPE WILL NOT BE ALLOWED.

BAGGED STONE SHALL REMAIN IN PLACE UNTIL THE ENGINEER DIRECTS THAT IT BE REMOVED. THE CONTRACTOR SHALL REMOVE AND DISPOSE OF SILT ACCUMULATIONS AT BAGGED STONE WHEN SO DIRECTED BY THE ENGINEER. BAGS SHALL BE REMOVED AND REPLACED WHENEVER THE ENGINEER DETERMINES THAT THEY HAVE DETERIORATED AND LOST THEIR EFFECTIVENESS.

NO SEPARATE PAYMENT WILL BE MADE FOR THIS WORK AND THE ENTIRE COST OF THIS WORK SHALL BE INCLUDED IN THE UNIT CONTRACT PRICE BID FOR THE SEVERAL PAY ITEMS.

TEMPORARY DRAINAGE AT END BENT

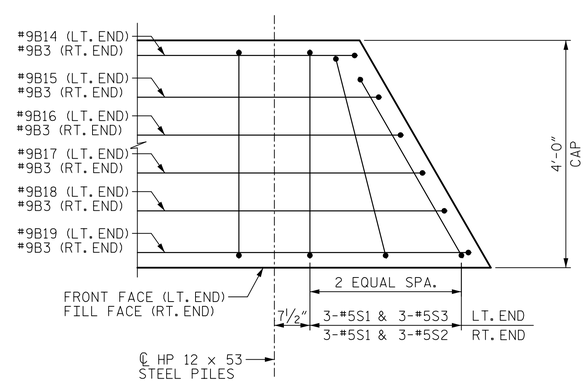

SPLAYED BAR DETAIL

PLAN VIEW SHOWN AT RIGHT END, LEFT END SIMILAR BY ROTATION.

PROJECT NO. B-5717

GUILFORD COUNTY

STATION: 21+22.00 -L-

SHEET 3 OF 3

AECOM
AECOM TECHNICAL SERVICES OF NC, INC.
5438 WADE PARK BOULEVARD, SUITE 200
RALEIGH, NC 27607
(919) 854-6200 www.aecom.com
AECOM License No. F-0342

STATE OF NORTH CAROLINA
DEPARTMENT OF TRANSPORTATION
RALEIGH

SUBSTRUCTURE

INTEGRAL END BENT 1

(RIGHT LANE)

NORTH CAROLINA PROFESSIONAL SEAL 043242 ENGINEER SWETHA NATARAJAN 6/9/2022

DocuSigned by: Swetha Natarajan, P.E. B6D5E2B3BC1C4...

REVISIONS						SHEET NO.
NO.	BY:	DATE:	NO.	BY:	DATE:	S1-28
1	SN	6-9-22	3			TOTAL SHEETS
2			4			38

DRAWN BY : D.R. DRUM DATE : 05/2021
CHECKED BY : S. NATARAJAN DATE : 08/2021
DESIGNED BY : D.R. DRUM DATE : 05/2021
DESIGN CHECKED BY : S. NATARAJAN DATE : 05/2021

1 REVISION #1: REMOVED PREDRILLING FOR PILES PAY ITEM.

DOCUMENT NOT CONSIDERED FINAL UNLESS ALL SIGNATURES COMPLETED

DATE: 6/9/2022
TIME: 11:26:18 AM

USER: gregorycals
DGN: pw:\\aecom-nc-pw.bentley.com:AECOM_DS2_NA_2020\Documents\60592827-NCDOT SMU B-5717\900-CAD GISWG\CADVTO_NCDOT_TIP\Structures\04 Drawings\401_055_B-5717_SMU_E103_S1-28_400\09.dgn