DocuSign Envelope ID: 2AD1449B-C1F3-4078-88A7-D2AACDD998A5

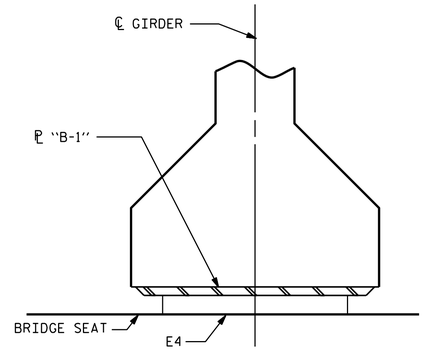

INTEGRAL

SECTION F-F

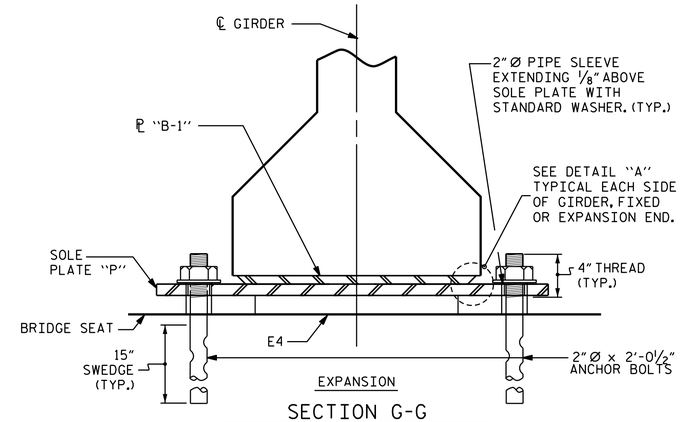

EXPANSION

SECTION G-G

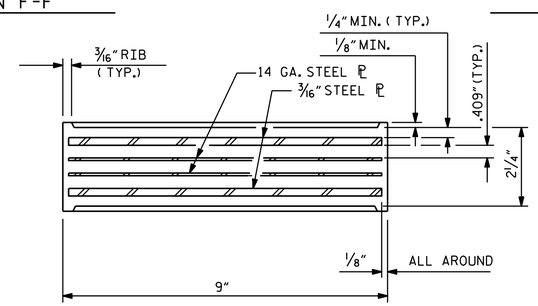

TYPICAL SECTION OF ELASTOMERIC BEARINGS

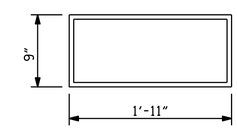

E4 (30 REQ'D)

PLAN VIEW OF ELASTOMERIC BEARING

TYPE V

NOTES

AT ALL FIXED POINTS OF SUPPORT, NUTS FOR ANCHOR BOLTS ARE TO BE TIGHTENED FINGER TIGHT AND THEN BACKED OFF 1/2 TURN. THE THREAD OF THE NUT AND BOLT SHALL THEN BE BURRED WITH A SHARP POINTED TOOL.

THE 2" Ø PIPE SLEEVE SHALL BE CUT FROM SCHEDULE 40 PVC PLASTIC PIPE. THE PVC PLASTIC PIPE SHALL MEET THE REQUIREMENTS OF ASTM D1785.

STEEL SOLE PLATES, ANCHOR BOLTS, NUTS, AND WASHERS SHALL BE GALVANIZED IN ACCORDANCE WITH THE STANDARD SPECIFICATIONS.

PRIOR TO WELDING, GRIND THE GALVANIZED SURFACE OF THE PORTION OF THE EMBEDDED PLATE AND SOLE PLATE THAT ARE TO BE WELDED. AFTER WELDING, DAMAGED GALVANIZED SURFACES SHALL BE REPAIRED IN ACCORDANCE WITH THE STANDARD SPECIFICATIONS.

WHEN WELDING THE SOLE PLATE TO THE EMBEDDED PLATE IN THE GIRDER, USE TEMPERATURE INDICATING WAX PENS, OR OTHER SUITABLE MEANS, TO ENSURE THAT THE TEMPERATURE OF THE SOLE PLATE DOES NOT EXCEED 300°F. TEMPERATURES ABOVE THIS MAY DAMAGE THE ELASTOMER.

SOLE PLATE "P", BOLTS, NUTS, WASHERS, AND PIPE SLEEVE SHALL BE INCLUDED IN THE PAY ITEM FOR PRESTRESSED CONCRETE GIRDERS.

ANCHOR BOLTS SHALL MEET THE REQUIREMENTS OF ASTM A449. NUTS SHALL MEET THE REQUIREMENTS OF AASHTO M291-DH OR AASHTO M292-2H. WASHERS SHALL MEET THE REQUIREMENTS OF AASHTO M293. SHOP DRAWINGS ARE NOT REQUIRED FOR ANCHOR BOLT, NUTS AND WASHERS. SHOP INSPECTION IS REQUIRED.

ALL SURFACES OF BEARING PLATES SHALL BE SMOOTH AND STRAIGHT.

THE ELASTOMER IN THE STEEL REINFORCED BEARINGS SHALL HAVE A SHEAR MODULUS OF 0.160 KSI, IN ACCORDANCE WITH AASHTO M251.

FOR STEEL REINFORCED ELASTOMERIC BEARINGS, SEE SPECIAL PROVISIONS.

ALL SOLE PLATES SHALL BE AASHTO M270 GRADE 36.

MAXIMUM ALLOWABLE SERVICE LOADS	
D.L.+L.L. (NO IMPACT)	
TYPE V	365 k

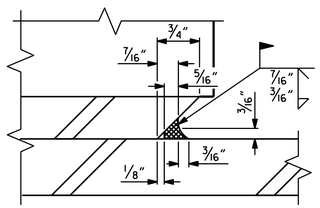

DETAIL "A"

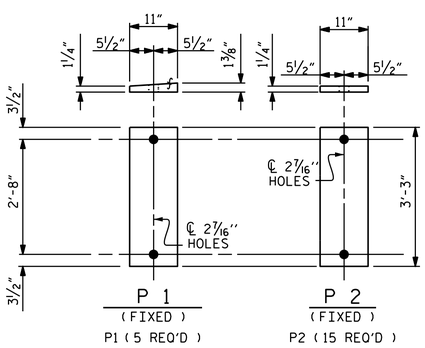

SOLE PLATE DETAILS ("P")

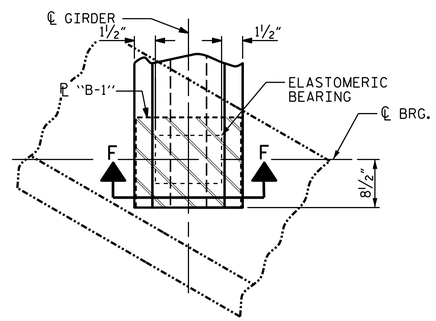

TYPICAL PLAN AT END BENT

(SHOWING INTEGRAL END BENT)

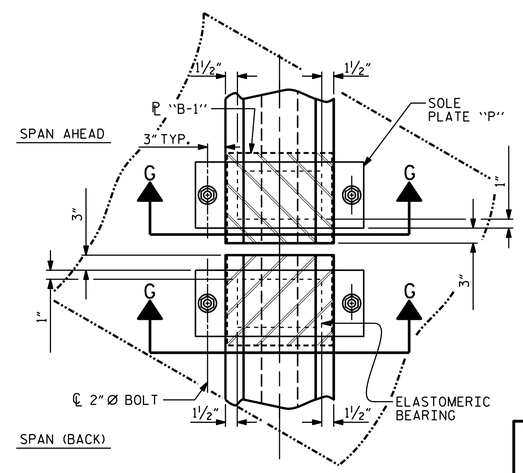

BEARING PLAN AT BENTS

(SHOWING SIMPLE SPAN BENT)

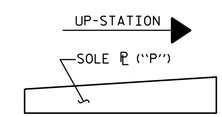

SOLE ℗ PLACEMENT DETAIL

PROJECT NO. B-5717

GUILFORD COUNTY

STATION: 21+22.00 -L-

ASSEMBLED BY : B.D. HODACK		DATE : 05/2021	
CHECKED BY : G.R. COLS		DATE : 09/2021	
DRAWN BY : EEM 2/97	REV. 6/13	AAC/MAA	
CHECKED BY : VAP 2/97	REV. 1/15	MAA/TMG	
	REV. 12/17	MAA/THC	

AECOM

AECOM TECHNICAL SERVICES OF NC, INC.
5438 WADE PARK BOULEVARD, SUITE 200
RALEIGH, NC 27607
(919) 854-6200 www.aecom.com
AECOM License No. F-0342

NORTH CAROLINA PROFESSIONAL SEAL 041543 ENGINEER GREGORY R. COLS

Docusigned by: 1B0CFCC2C0... 4/8/2022

DOCUMENT NOT CONSIDERED FINAL UNLESS ALL SIGNATURES COMPLETED

STATE OF NORTH CAROLINA
DEPARTMENT OF TRANSPORTATION
RALEIGH

STANDARD
ELASTOMERIC BEARING DETAILS
PRESTRESSED CONCRETE GIRDER SUPERSTRUCTURE
RIGHT LANE

REVISIONS							SHEET NO.
NO.	BY:	DATE:	NO.	BY:	DATE:		S1-16
1			3				TOTAL SHEETS
2			4				38

STD. NO. EB3

DATE: 3/31/2022
TIME: 3:41:40 PM
USER: dpridgeldrum
DGN: pw:\\aecom-na-pw.bentley.com:AECOM_DSD_NA_2020:Documents\60592827-NCDOT SMU B-5717\900-CAD GIS\910_CAD\70_NCDOT_TIP\Structures\04 Drawings\40_03_B-5717_SMU_BRG_S1-16_400103.dgn