DocuSign Envelope ID: 2AD1449B-C1F3-4078-88A7-D2AACDD998A5

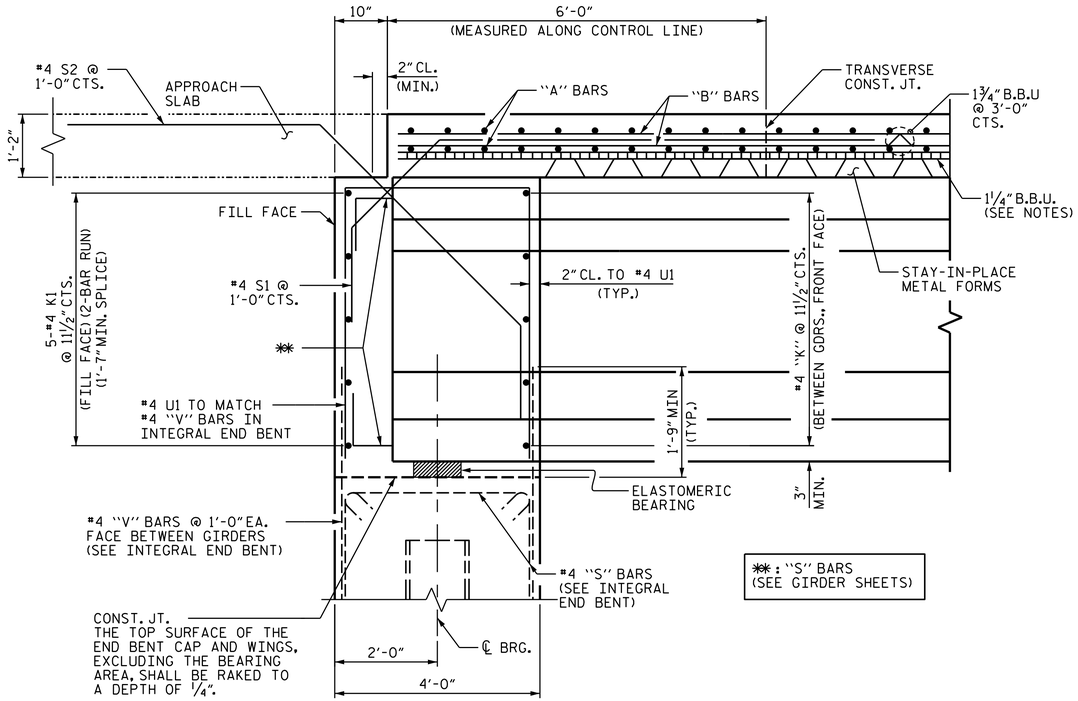

✱✱: "S" BARS (SEE GIRDER SHEETS)

SECTION A-A @ INTEGRAL END BENT

SECTION SHOWN NORMAL TO END BENT EXCEPT AS NOTED

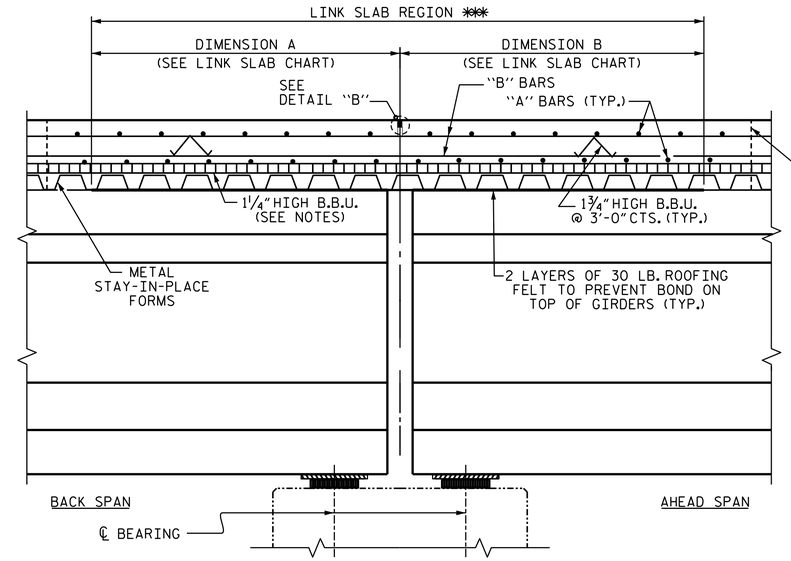

SECTION B-B @ LINK SLAB

SECTION SHOWN ALONG GIRDER

LINK SLAB CHART		
BENT No.	A	B
1	4'-5"	7'-2"
2	7'-2"	4'-5"

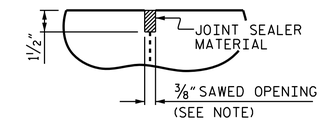

A 1½" DEEP, ⅜" WIDE CONTRACTION JOINT AT BENT CONTROL LINE SHALL BE SAWN WITHIN 24 HOURS OF POURING THE DECK. THE JOINT SHALL BE FILLED WITH JOINT SEALER MATERIAL. THE JOINT SEALER MATERIAL SHALL CONFORM TO THE REQUIREMENTS OF SECTION 1028-3 OF THE STANDARD SPECIFICATIONS.

DETAIL "B"

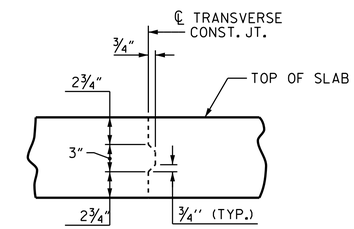

TRANSVERSE CONSTRUCTION JOINT IN DECK SLAB

NOTE: REINFORCING STEEL IN SLAB NOT SHOWN. REINFORCING STEEL SHALL BE CONTINUOUS THRU JOINT.

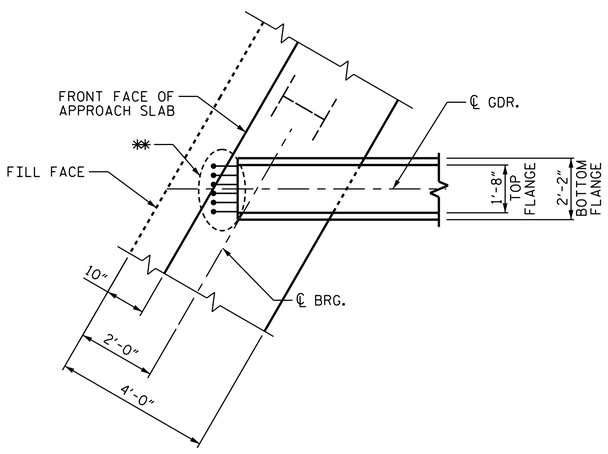

PLAN @ INTEGRAL END BENT

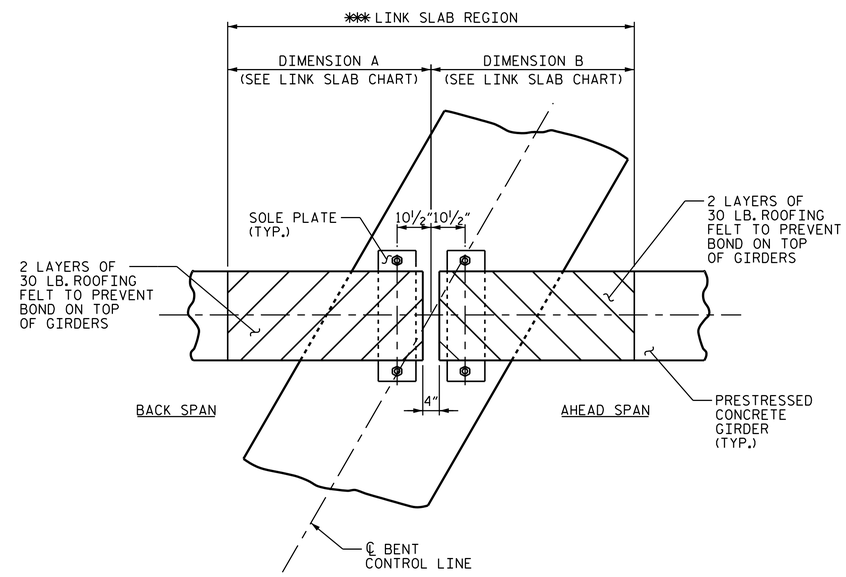

✱✱✱: THE TOP OF GIRDER IN THE REGION OF THE LINK SLAB SHALL BE SMOOTH (NOT RAKED) AND FREE OF STIRRUPS, ANCHOR STUDS, DECK FORMWORK ATTACHMENTS, AND OVERHANG FALSEWORK/FORMWORK ATTACHMENTS.

METAL STAY-IN-PLACE FORMS SHALL NOT BE WELDED TO THE GIRDER FLANGES IN THE REGION OF THE LINK SLAB.

PLAN @ BENT

PROJECT NO. B-5717

GUILFORD COUNTY

STATION: 21+22.00 -L-

SHEET 2 OF 2

AECOM
AECOM TECHNICAL SERVICES OF NC, INC.
5438 WADE PARK BOULEVARD, SUITE 200
RALEIGH, NC 27607
(919) 854-6200 www.aecom.com
AECOM License No. F-0342

NORTH CAROLINA PROFESSIONAL SEAL 041343 ENGINEER GREGORY R. COLS
DocuSigned by: 1B0CF0C2C0A4... 4/8/2022

STATE OF NORTH CAROLINA
DEPARTMENT OF TRANSPORTATION
RALEIGH

SUPERSTRUCTURE

TYPICAL SECTION DETAILS

(RIGHT LANE)

REVISIONS							
NO.	BY:	DATE:	NO.	BY:	DATE:	SHEET NO.	
1			3			S1-06	
2			4			TOTAL SHEETS	
						38	

DRAWN BY :	M.L. CATER	DATE :	09/2021
CHECKED BY :	G. L. HAMILTON	DATE :	06/2021
DESIGNED BY :	D.R. DRUM	DATE :	06/2021
DESIGN CHECKED BY :	S. NATARAJAN	DATE :	06/2021

DOCUMENT NOT CONSIDERED FINAL UNLESS ALL SIGNATURES COMPLETED

DATE: 3/31/2022
TIME: 3:40:21 PM
USER: dantel drum
DGN: pw:\\aecom-na-pw.bentley.com:AECOM_DS21_NA_2020\Documents\60592827-NCDOT SMU B-5717\900-CAD GIS\910_CADD\70_NCDOT_T1P\Structures\04 Drawings\40_01_B-5717_SMU_TS2_S1-06_400109.dgn