DocuSign Envelope ID: F94E1B6C-CA3A-4EBF-B092-F6068F010D32

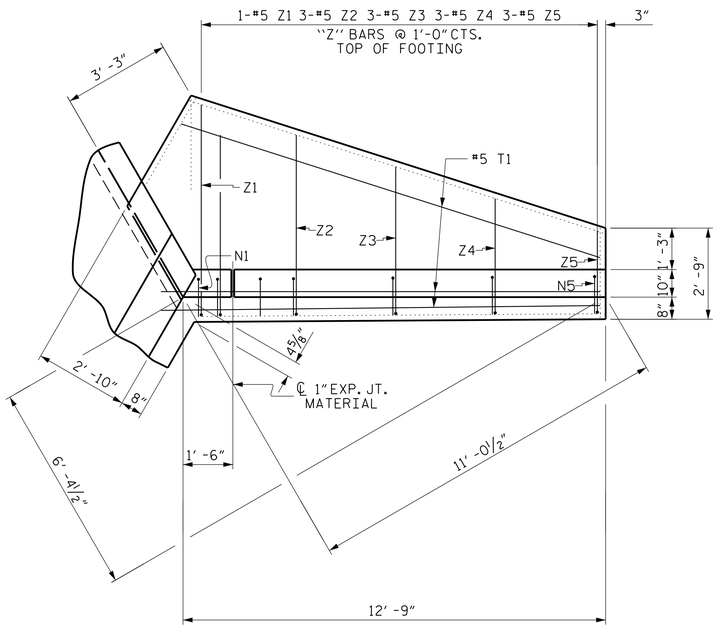

PLAN W2

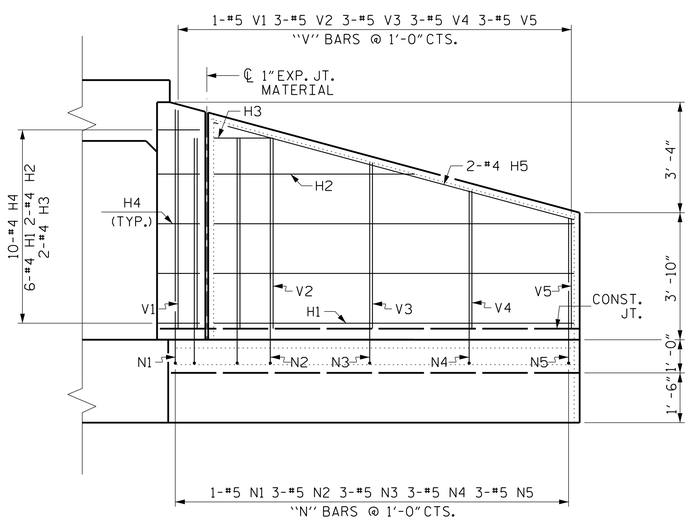

ELEVATION W2

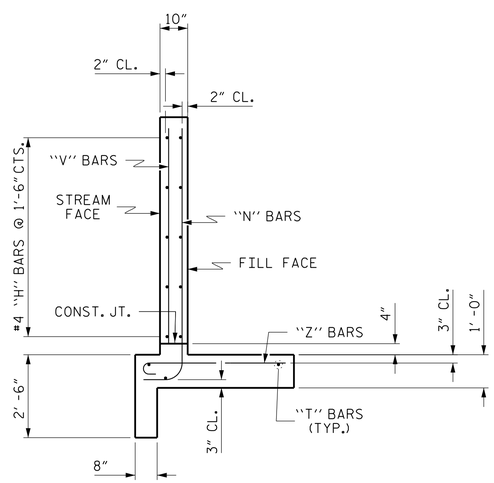

TYPICAL WING SECTION

BAR TYPES

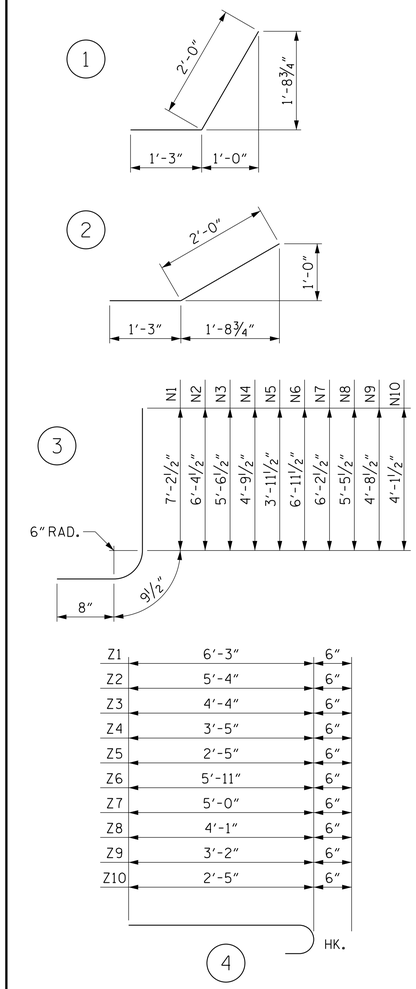

ALL BAR DIMENSIONS ARE OUT TO OUT.

BILL OF MATERIAL

BAR	NO.	SIZE	TYPE	LENGTH	WEIGHT
H1	12	#4	STR	10'-10"	87
H2	4	#4	STR	6'-0"	16
H3	4	#4	STR	1'-10"	5
H4	20	#4	1	3'-3"	43
H5	4	#4	STR	11'-3"	30
H6	12	#4	STR	19'-6"	156
H7	4	#4	STR	12'-0"	32
H8	4	#4	STR	2'-3"	6
H9	20	#4	2	3'-3"	43
H10	4	#4	STR	19'-9"	53
N1	2	#5	3	8'-8"	18
N2	6	#5	3	7'-10"	49
N3	6	#5	3	7'-0"	44
N4	6	#5	3	6'-3"	39
N5	6	#5	3	5'-5"	34
N6	6	#5	3	8'-5"	53
N7	10	#5	3	7'-8"	80
N8	10	#5	3	6'-11"	72
N9	10	#5	3	6'-2"	64
N10	8	#5	3	5'-7"	47
T1	6	#5	STR	13'-0"	81
T2	6	#5	STR	22'-3"	139
V1	2	#4	STR	6'-7"	9
V2	6	#4	STR	5'-9"	23
V3	6	#4	STR	5'-0"	20
V4	6	#4	STR	4'-2"	17
V5	6	#4	STR	3'-4"	13
V6	6	#4	STR	6'-5"	26
V7	10	#4	STR	5'-8"	38
V8	10	#4	STR	4'-11"	33
V9	10	#4	STR	4'-1"	27
V10	8	#4	STR	3'-6"	19
Z1	2	#5	4	6'-9"	14
Z2	6	#5	4	5'-10"	37
Z3	6	#5	4	4'-10"	30
Z4	6	#5	4	3'-11"	25
Z5	6	#5	4	2'-11"	18
Z6	6	#5	4	6'-5"	40
Z7	10	#5	4	5'-6"	57
Z8	10	#5	4	4'-7"	48
Z9	10	#5	4	3'-8"	38
Z10	8	#5	4	2'-11"	24

REINFORCING STEEL FOR 4 WINGS 1747 LBS

CLASS A CONCRETE
- 4 WINGS 24.9 CY
- 2 HEADWALLS 2.6 CY
- 2 END CURTAIN WALLS 4.4 CY
- TOTAL 31.9 CY

PROJECT NO. R-5819

COLUMBUS COUNTY

STATION: 65+70.00 -Y7-

SHEET 6 OF 7

STATE OF NORTH CAROLINA
DEPARTMENT OF TRANSPORTATION
RALEIGH

WINGS FOR CONCRETE BOX CULVERT

H = 6'-0" SLOPE = 3:1

120° SKEW

PLANS PREPARED BY:

NV5 ENGINEERS & CONSULTANTS, INC.
3300 REGENCY PARKWAY, SUITE 100
CARY, NC 27518
P: 919.851.1912 www.NV5.com
NC License # F-1333
formerly CALYX Engineers & Consultants

DOCUMENT NOT CONSIDERED FINAL UNLESS ALL SIGNATURES COMPLETED

NORTH CAROLINA PROFESSIONAL ENGINEER SEAL L. KEVIN AUSTIN
Docusigned by: L. Kevin Austin
DOCUSIGN 727B3F9DE9A8
4/11/2022

REVISIONS						
NO.	BY:	DATE:	NO.	BY:	DATE:	
1			3			
2			4			

SHEET NO. C-6

TOTAL SHEETS 7

DRAWN BY :	J. A. PANDOLI	DATE :	2/22
CHECKED BY :	L. K. AUSTIN	DATE :	2/22
DESIGN ENGINEER OF RECORD:	L. K. AUSTIN	DATE :	2/22

4/8/2022 3:49:58 PM G:\Project\206\206032\0\CLIENT\Structures\Y-Y7- Culvert (R-5819)\CADD Files\R5819_SMU_CU_06.dgn