DocuSign Envelope ID: F94E1B6C-CA3A-4EBF-B092-F6068F010D32

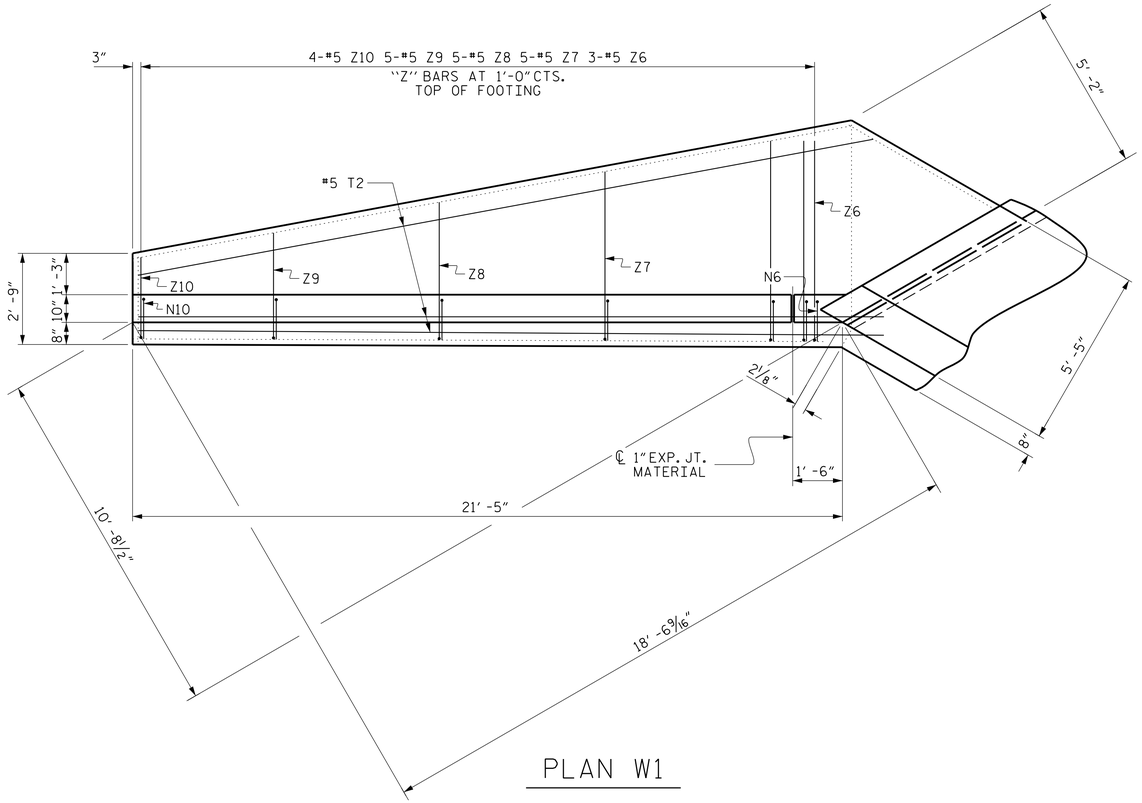

PLAN W1

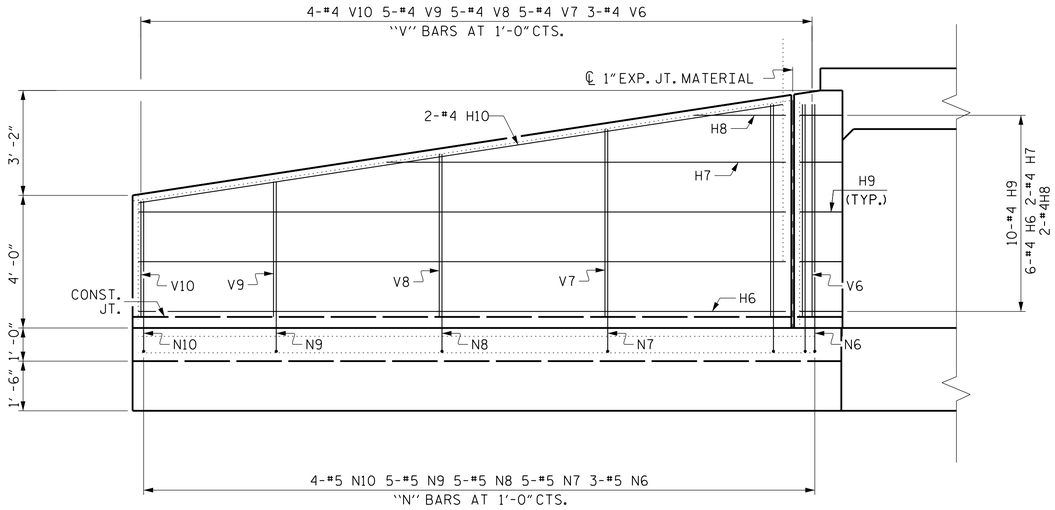

ELEVATION W1

PROJECT NO. R-5819

COLUMBUS COUNTY

STATION: 65+70.00 -Y7-

SHEET 5 OF 7

STATE OF NORTH CAROLINA
DEPARTMENT OF TRANSPORTATION
RALEIGH

WINGS FOR CONCRETE BOX CULVERT

H = 6'-0" SLOPE = 3:1

120° SKEW

PLANS PREPARED BY:

NV5

NV5 ENGINEERS & CONSULTANTS, INC.
3300 REGENCY PARKWAY, SUITE 100
CARY, NC 27518
P: 919.851.1912 www.NV5.com
NC License # F-1333
formerly CALYX Engineers & Consultants

DOCUMENT NOT CONSIDERED FINAL UNLESS ALL SIGNATURES COMPLETED

NORTH CAROLINA PROFESSIONAL ENGINEER L. KEVIN AUSTIN
Digitally signed by: L. Kevin Austin
Date: 2022.04.11 12:57:37 -04'00'
4/11/2022

REVISIONS						SHEET NO.
NO.	BY:	DATE:	NO.	BY:	DATE:	C-5
1			3			TOTAL SHEETS
2			4			7

DRAWN BY :	J. A. PANDOLI	DATE :	2/22
CHECKED BY :	L. K. AUSTIN	DATE :	2/22
DESIGN ENGINEER OF RECORD:	L. K. AUSTIN	DATE :	2/22

4/8/2022 3:16:23 PM G:\Project\2016\2016032.10\CLIENT\Structures\-Y7- Culvert (R-5819)\CADD Files\R5819_SMU_CU_05.dgn