PROJECT REFERENCE NO.	SHEET NO.
U-5606	Sig. 8.1

EDI MODEL 2018ECL-NC CONFLICT MONITOR PROGRAMMING DETAIL

(remove jumpers and set switches as shown)

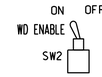

REMOVE DIODE JUMPERS 2-6, 2-9, 2-11, 2-13, 2-15, 4-8, 4-10, 4-12, 4-14, 4-16, 6-9, 6-11, 6-13, 6-15, 8-10, 8-12, 8-14, 8-16, 9-11, 9-13, 9-15, 10-12, 10-14, 10-16, 11-13, 11-15, 12-14, 12-16, 13-15, and 14-16.

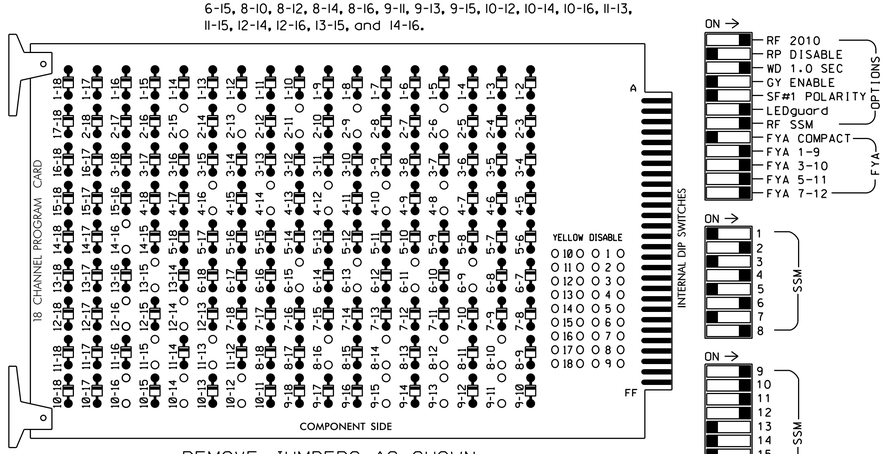

REMOVE JUMPERS AS SHOWN

■ = DENOTES POSITION OF SWITCH

NOTES:

1. Card is provided with all diode jumpers in place. Removal of any jumper allows its channels to run concurrently.
2. Ensure jumpers SEL2-SEL5 and SEL9 are present on the monitor board.
3. Ensure that Red Enable is active at all times during normal operation.
4. Connect serial cable from conflict monitor to comm. port 1 of 2070 controller. Ensure conflict monitor communicates with 2070.

NOTES

1. To prevent "flash-conflict" problems, insert red flash program blocks for all unused vehicle load switches in the output file. The installer shall verify that signal heads flash in accordance with the Signal Plans.
2. Program phases 4 and 8 for Dual Entry.
3. Program controller to start up in phase 2 Walk and 6 Walk.
4. If this signal will be managed by an ATMS software, enable controller and detector logging for all detectors used at this location.
5. The cabinet and controller are part of the Greenville Closed Loop System.

EQUIPMENT INFORMATION

CONTROLLER.....2070
CABINET.....332 W/AUX
SOFTWARE.....ECONOLITE ASC/3-2070
CABINET MOUNT.....BASE
OUTPUT FILE POSITIONS...18 WITH AUX. OUTPUT FILE
LOAD SWITCHES USED.....S2,S3,S5,S6,S8,S9,S11,S12, AUX S1,AUX S2,AUX S4,AUX S5
PHASES USED.....2,2PED,4,4PED,6,6PED,8,8PED
OVERLAP "A".....*
OVERLAP "B".....*
OVERLAP "C".....*
OVERLAP "D".....*

* See overlap programming detail on sheet 2

SIGNAL HEAD HOOK-UP CHART

LOAD SWITCH NO.	S1	S2	S3	S4	S5	S6	S7	S8	S9	S10	S11	S12	AUX S1	AUX S2	AUX S3	AUX S4	AUX S5	AUX S6
CMU CHANNEL NO.	1	2	13	3	4	14	5	6	15	7	8	16	9	10	17	11	12	18
PHASE	1	2	2 PED	3	4	4 PED	5	6	6 PED	7	8	8 PED	OLA	OLB	SPARE	OLC	OLD	SPARE
SIGNAL HEAD NO.	NU	22,23 24	P21, P22	NU	42,43	P41, P42	NU	62,63	P61, P62	NU	82,83	P81, P82	61 ★	81 ★	NU	21 ★	41 ★	NU
RED		128			101			134			107							
YELLOW		129			102			135			108							
GREEN		130			103			136			109							
RED ARROW													A121	A124		A114	A101	
YELLOW ARROW													A122	A125		A115	A102	
FLASHING YELLOW ARROW													A123	A126		A116	A103	
GREEN ARROW																		
✋			113			104			119			110						
🚶			115			106			121			112						

NU = Not Used

* Denotes install load resistor. See load resistor installation detail this sheet.

★ See pictorial of head wiring in detail this sheet.

FYA SIGNAL WIRING DETAIL

(wire signal heads as shown)

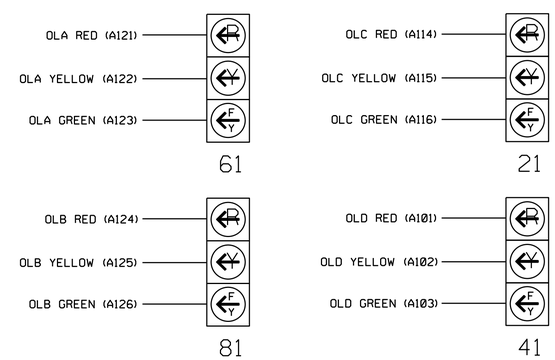

INPUT FILE POSITION LAYOUT

(front view)

		1	2	3	4	5	6	7	8	9	10	11	12	13	14
FILE "I"	U	SLOT	SLOT	SLOT	SLOT	SLOT	SLOT	SLOT	SLOT	SLOT	SLOT	SLOT	Ø2 PED DC ISOLATOR	Ø6 PED DC ISOLATOR	FS DC ISOLATOR
	L	EMPTY	EMPTY	EMPTY	EMPTY	EMPTY	EMPTY	EMPTY	EMPTY	EMPTY	EMPTY	EMPTY	Ø4 PED DC ISOLATOR	Ø8 PED DC ISOLATOR	ST DC ISOLATOR
FILE "J"	U	SLOT	SLOT	SLOT	SLOT	SLOT	SLOT	SLOT	SLOT	SLOT	SLOT	SLOT	SLOT	SLOT	SLOT
	L	EMPTY	EMPTY	EMPTY	EMPTY	EMPTY	EMPTY	EMPTY	EMPTY	EMPTY	EMPTY	EMPTY	EMPTY	EMPTY	EMPTY

EX.: 1A, 2A, ETC. = LOOP NO.'S

FS = FLASH SENSE
ST = STOP TIME

INPUT FILE CONNECTION & PROGRAMMING CHART

LOOP NO.	LOOP TERMINAL	INPUT FILE POS.	PIN NO.	DETECTOR NO.	NEMA PHASE	CALL	EXTEND TIME	DELAY TIME	ADDED INITIAL	DETECTOR TYPE
PED PUSH BUTTONS										
P21,P22	TB8-4,6	I12U	67	PED 2	2 PED					
P41,P42	TB8-5,6	I12L	69	PED 4	4 PED					
P61,P62	TB8-7,9	I13U	68	PED 6	6 PED					
P81,P82	TB8-8,9	I13L	70	PED 8	8 PED					

NOTE:
INSTALL DC ISOLATORS IN INPUT FILE SLOTS I12 AND I13.

INPUT FILE POSITION LEGEND: J2L
FILE J
SLOT 2
LOWER

SPECIAL DETECTOR NOTE

Install a multizone microwave detection system for vehicle detection. Perform installation according to manufacturer's directions and NCDOT engineer approved mounting locations to accomplish the detection schemes shown on the Signal Design Plans.

THIS ELECTRICAL DETAIL IS FOR
THE SIGNAL DESIGN: 02-0010
DESIGNED: November 2021
SEALED: 11/16/2021
REVISED: N/A

Electrical Detail - Sheet 1 of 2

ELECTRICAL AND PROGRAMMING DETAILS FOR:

SR 1610 (Reade Circle)/
SR 1531 (Greene Street)
at
SR 1620 (Dickinson Avenue)

Division 2 Pitt County Greenville

PLAN DATE: October 2018 REVIEWED BY:
PREPARED BY: S. Armstrong REVIEWED BY:

REVISIONS	INIT.	DATE
No electrical changes. (WSA)		

Prepared in the Offices of:
Transportation Mobility and Safety Division
STATE OF NORTH CAROLINA
DEPARTMENT OF TRANSPORTATION
ITS & Signals Management Section
750 N.Greenfield Pkwy,Garner,NC 27529

SEAL
NORTH CAROLINA PROFESSIONAL SEAL 036833 ENGINEER RYAN W. HOUGH

DocuSigned by: Ryan W. Hough 10/1/2018
ENGINEER'S SIGNATURE DATE

SIG. INVENTORY NO. 02-0010

17-NOV-2021 12:10
S:\HITSCAD\ITS\Signals\Workgroups\Sig Mgmt\Projects From Signal Design\Active Projects\Armstrong\DIV Projects\02-0003, 0004, 0006, 0010 U-5606 div project\02-0010\02_sm_ele_xxx.dgn
sarmstrong