Design Loading for METAL POLE NO. 1, MAST ARM A

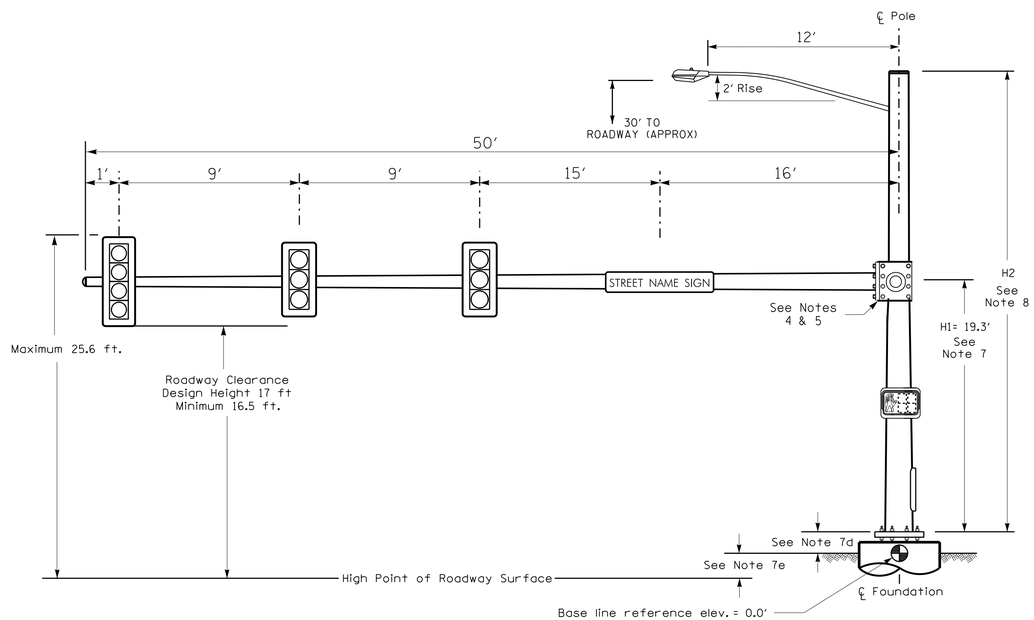

Elevation View @ 0

Design Loading for METAL POLE NO. 1, MAST ARM B

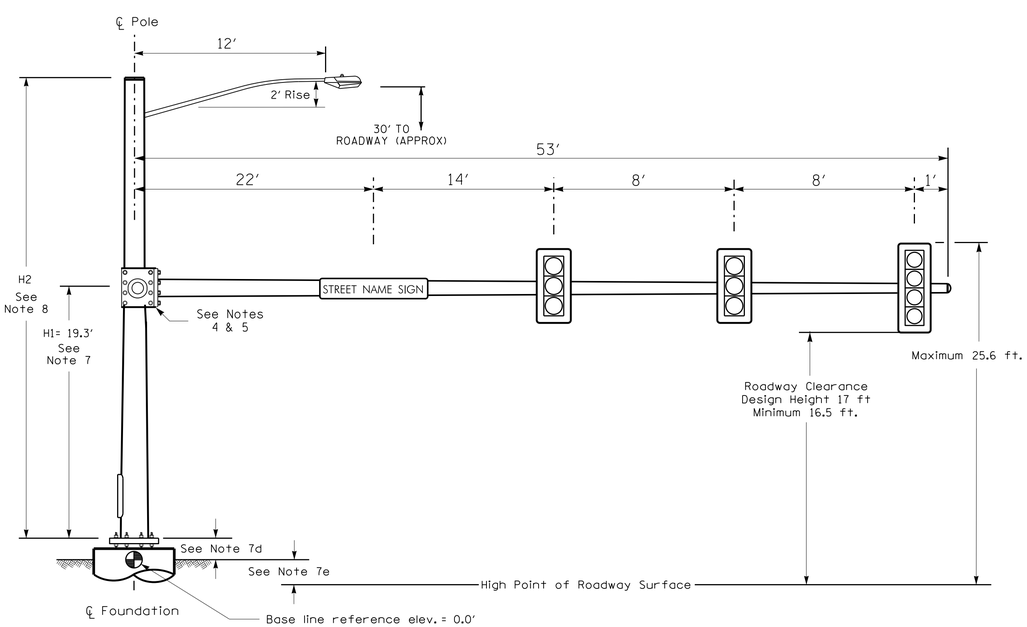

Elevation View @ 270°

SPECIAL NOTE

The contractor is responsible for verifying that the mast arm attachment height (H1) will provide the "Design Height" clearance from the roadway before submitting final shop drawings for approval. Verify elevation data below which was obtained by field measurement or from available project survey data.

Elevation Data for Mast Arm Attachment (H1)

Elevation Differences for:	Arm "A"	Arm "B"
Baseline reference point at ℄ Foundation @ ground level	0.0 ft.	0.0 ft.
Elevation difference at High point of roadway surface	0.0 ft.	0.3 ft.
Elevation difference at Edge of travelway or face of curb	0.0 ft.	0.3 ft.

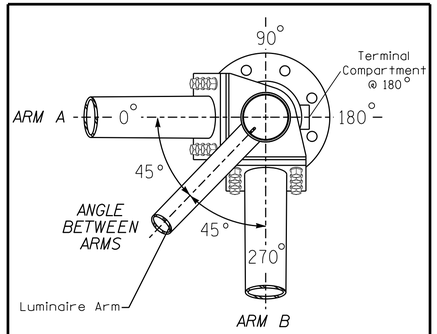

POLE RADIAL ORIENTATION

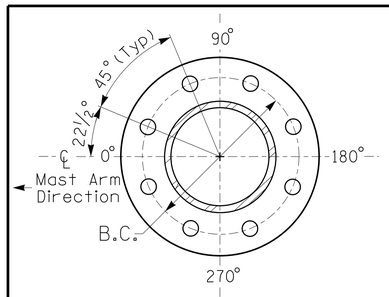

8 BOLT BASE PLATE DETAIL

See Note 6

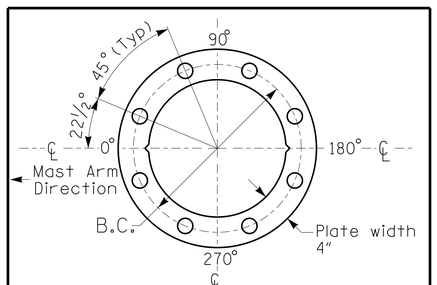

BASE PLATE TEMPLATE & ANCHOR BOLT LOCK PLATE DETAIL

For 8 Bolt Base Plate

MAST ARM LOADING SCHEDULE

LOADING SYMBOL	DESCRIPTION	AREA	SIZE	WEIGHT
	RIGID MOUNTED SIGNAL HEAD 12″-4 SECTION-WITH BACKPLATE	11.5 S.F.	25.5″ W X 66.0″ L	74 LBS
	RIGID MOUNTED SIGNAL HEAD 12″-3 SECTION-WITH BACKPLATE	9.3 S.F.	25.5″ W X 52.5″ L	60 LBS
	PEDESTRIAN SIGNAL HEAD WITH MOUNTING HARDWARE	2.2 S.F.	18.5″ W X 17.0″ L	21 LBS
	LUMINAIRE	EPA 0.87 S.F.	13.25″ W X 26.25″ L	35 LBS
Street Name	STREET NAME SIGN RIGID MOUNTED	16.0 S.F.	24.0″ W X 96.0″ L	36 LBS

NOTES

DESIGN REFERENCE MATERIAL

1. Design the traffic signal structure and foundation in accordance with:
   - The 6th Edition 2013 AASHTO "Standard Specifications for Structural Supports for Highway Signs, Luminaires, and Traffic Signals, including all of the latest interim revisions.
   - The 2018 NCDOT "Standard Specifications for Roads and Structures." The latest addenda to the specifications can be found in the traffic signal project special provisions.
   - The 2018 NCDOT Roadway Standard Drawings.
   - The traffic signal project plans and special provisions.
   - The NCDOT "Metal Pole Standards" located at the following NCDOT website: https://connect.ncdot.gov/resources/safety/Pages/ITS-Design-Resources.aspx

DESIGN REQUIREMENTS

2. Design the traffic signal structure using the loading conditions shown in the elevation views. These are anticipated worst case "design loads" and may not represent the actual loads that will be applied at the time of the installation. The contractor should refer to the traffic signal plans for the actual loads that will be applied at the time of the installation.
3. Design all signal supports using stress ratios that do not exceed 0.9.
4. The camber design for the mast arm deflection should provide an appearance of a low pitched arch where the tip or the free end of the mast arm does not deflect below horizontal when fully loaded.
5. A clamp-type bolted mast arm-to-pole connection may be used instead of the welded ring stiffened box connection shown as long as the connection meets all of the design requirements.
6. Design base plate with 8 anchor bolt holes. Provide 2 inch x 60 inch anchor bolts.
7. The mast arm attachment height (H1) shown is based on the following design assumptions:
   a. Mast arm slope and deflection are not considered in determining the arm attachment height as they are assumed to offset each other.
   b. Signal heads are rigidly mounted and vertically centered on the mast arm.
   c. The roadway clearance height for design is as shown in the elevation views.
   d. The top of the pole base plate is 0.75 feet above the ground elevation.
   e. Refer to the Elevation Data Chart for the elevation differences between the proposed foundation ground level and the high point of the roadway.
8. The pole manufacturer will determine the total height (H2) of each pole X based on the luminaire height requirement of 30 ft.
9. If pole location adjustments are required, the contractor must gain approval from the Engineer as this may affect the mast arm lengths and arm attachment heights. The contractor may contact the Signal Design Section Senior Structural Engineer for assistance at (919) 814-4929.
10. The contractor is responsible for verifying that the mast arm length shown will allow proper positioning of the signal heads over the roadway.
11. The contractor is responsible for providing soil penetration testing data (SPT) to the pole manufacturer so site specific foundations can be designed.
12. Comply with NEC code 230.2(E) concerning service equipment disconnect.
13. Lighting fixture and luminaire arm represent a load condition to the pole and may not represent exactly how the fixtures will be mounted. The contractor is responsible for ensuring that any required factory preps for mounting fixtures to the pole are included on the shop drawings.
14. Design the luminaire support arm using design dimensions as shown on elevations views. Refer to the Radial Orientation Detail for attachment to the signal pole. Design arm end for a nominal 2 inch slip fit socket connection for light assembly.

All metal poles and arms should have protective coating as specified in the project special provisions.

NCDOT Wind Zone 2 (130 mph)

Prepared in the Offices of:
Transportation Mobility and Safety Division
Signal Design Section
750 N.Greenfield Pkwy,Garner,NC 27529

SR 1703 (W 14th Street) at SR 1598 (Dickinson Avenue)

Division 2 Pitt County Greenville

PLAN DATE:	EMM	REVIEWED BY:	MEL
PREPARED BY:	January 2018	REVIEWED BY:	

SCALE 0 N/A N/A

REVISIONS	INIT.	DATE

SEAL
NORTH CAROLINA PROFESSIONAL SEAL 042608 ENGINEER MEGHAN E. LEBLANC

DocuSigned by: Meghan E. LeBlanc 3/6/2018
B23A0A8233630486
DATE

SIG. INVENTORY NO. 02-0006

06-MAR-2018 10:04
U:\Traffic\Signals\Designs\Signals\02-0006\MastArms\020006-2018mmdsm1bm2.dgn
meleblanc