PROJECT REFERENCE NO.	SHEET NO.
U-5606	Sig. 4.3

ECONOLITE ASC/3-2070 RAILROAD PREEMPT PROGRAMMING DETAIL

(program controller as shown)

1. From Main Menu select [4. PREEMPTOR/TSP]
2. From PREEMPTOR/TSP/SCP Submenu select [1. PREEMPT PLAN 1-10]

Place cursor in [ ] next to Preempt Plan and press 1. Then press the right cursor arrow and toggle the controller to YES. Next cursor down. This will select Railroad Preempt #1.

```
PREEMPT PLAN [  1]     ENABLE....YES
 VEH/PED 1 2 3 4 5 6 7 8 9 0 1 2 3 4 5 6
 OVERLAP A B C D E F G H I J K L M N O P
TRKCLR V . . . X . . X . . . . . . . . .
TRKCLR O . . .F1 . . . . . . . . . . . .
ENA TRL  . . . . . . . . . . . . . . . .
DWEL VEH . . . . . . . . . . . . . . . .
DWEL PED . . . . . . . . . . . . . . . .
DWEL OLP . . . . . . . . . . . . . . . .
CYC VEH  . X X . . X . . . . . . . . . .
CYC PED  . X . . . X . . . . . . . . . .
CYC OLP F1F1 . . . . . . . . . . . . . .
EXIT PH  . . X . . . X . . . . . . . . .
EXIT CAL . . . . . . . . . . . . . . . .
SP FUNC  . . . . . . . . . . . . . . . .

ENABLE... YESIPMT OVRIDE.XIINTERLOCK. NO
DET LOCK... XIDELAY..    OIINHIBIT...  0
OVERIDE FL. .IDURATION   OICLR-GRN... NO
TERM OLP.  NOIPC>YEL   YESITERM PH    NO
PED DARK.. NOITC RESRV YESIDWELL FL  OFF
LINK PMT....OIX FLCOLR REDIEXIT OPT. OFF
X TMG PLN...OIRE-SERV..  OIFLT TYPE.HARD
FREE DUR PMTIR1  NOIR2  NOIR3  NOIR4  NO
--TIMING-----WALKIPED CLIMN GRI YELI RED
ENTRANCE TM.    1I     3I    1I25.5I25.5
-----------MIN GRIPMTEXTIMX TMI YELI RED
TRACK CLEAR    24I   0.0I    0I25.5I25.5
-----------MIN DLIPMTEXTIMX TMI YELI RED
DWL/CYC-EXIT    7I   0.0I    0I25.5I25.5
PMT ACTIVE OUT..ON   PMT ACT DWELL...NO
OTHER - PRI PMT.OFF  NON-PRI PMT.....OFF
INH EXT TIME... 0.0  PED PR RETURN...OFF
PRIORITY RETURN.OFF  QUEUE DELAY.... OFF
COND DELAY......OFF
PHASES     1   2   3   4   5   6   7   8
PR RTN%    0   0   0   0   0   0   0   0
PHASES     9  10  11  12  13  14  15  16
PR RTN%    0   0   0   0   0   0   0   0
```

RAILROAD PREEMPTION WIRING DETAIL

(wire as shown below)

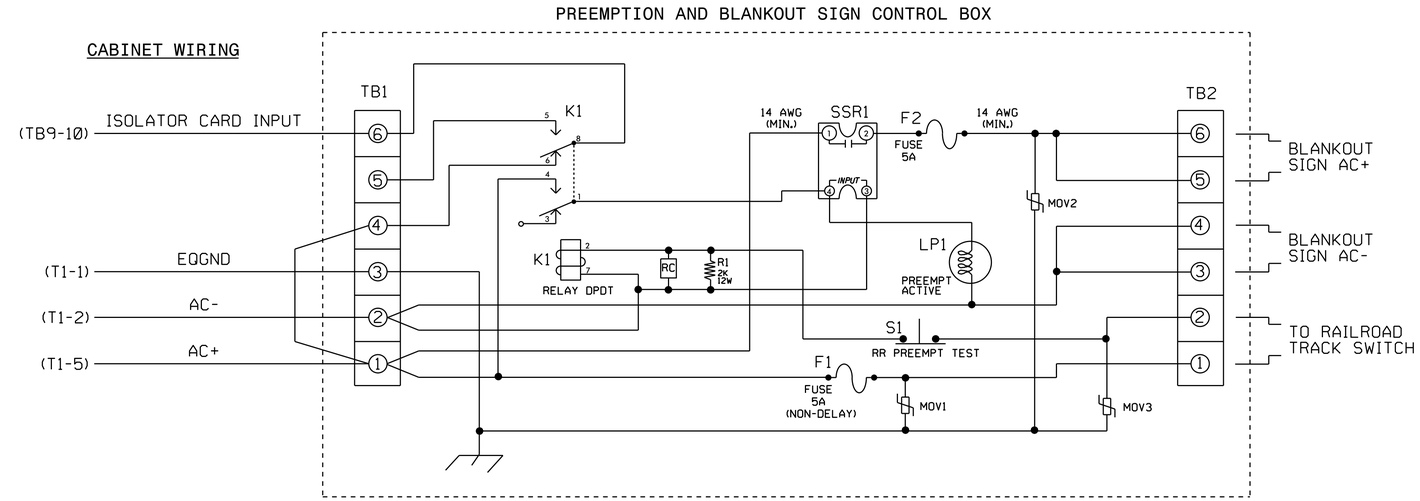

NOTES

1. Relay K1 is shown in the energized (Preempt not active) normal operation state.
2. Relay K1 is a DPDT with 120VAC coil with octal base.
3. Relay SSR1 is a SPST (normally open) Solid State Relay with AC input and AC (25 amp) output.
4. AC Isolator Card shall activate preemption upon removal of AC+ from the input (as shown above). To accomplish this set invert dip switch on AC Isolator Card as shown on the detail on this sheet.
5. IMPORTANT!! A jumper must be added between input file terminals J14-E and J14-K if not already present. Also, terminal TB9-12 (on input panel) shall be connected to AC neutral (jumper may have to be added).

FRONT VIEW

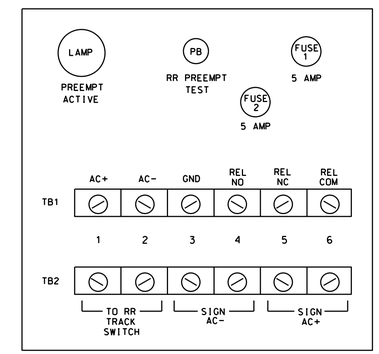

PREEMPT 1 AC ISOLATOR (MODEL 252) OUTPUT PROGRAMMING DETAIL

(set DIP switches as shown below)

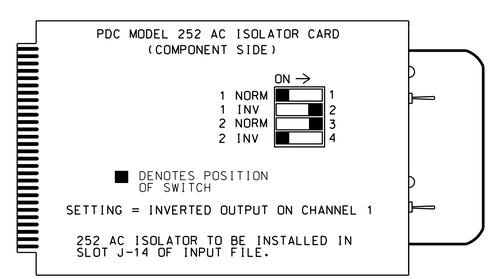

NOTE: IF ANOTHER MANUFACTURER TYPE OF AC ISOLATOR IS USED, OUTPUT PROGRAMMING IS LIKELY NOT TO EQUATE TO THAT SHOWN ABOVE.

THIS ELECTRICAL DETAIL IS FOR
THE SIGNAL DESIGN: 02-0004T1
DESIGNED: January 2018
SEALED: 2/19/2018
REVISED: N/A

Electrical Detail - Sheet 3 of 3

DOCUMENT NOT CONSIDERED FINAL UNLESS ALL SIGNATURES COMPLETED

ELECTRICAL AND PROGRAMMING DETAILS FOR:

SR 1598 (Dickinson Avenue)
at
SR 1701 (Hooker Rd)/
SR 1709 (Moye Boulevard)

Division 2 | Pitt County | Greenville

PLAN DATE: February 2018 | REVIEWED BY:

PREPARED BY: S. Armstrong | REVIEWED BY:

REVISIONS	INIT.	DATE

Prepared in the Offices of:
Traffic Engineering & Signals Management Section, Mobility and Safety Division, Department of Transportation, State of North Carolina
750 N.Greenfield Pkwy,Garner,NC 27529

SEAL
NORTH CAROLINA PROFESSIONAL SEAL 036880 ENGINEER KEITH M. MINS

DocuSigned by: Keith M. Mins 2/26/2018
2F80786EBCD34A5 DATE

SIG. INVENTORY NO. 02-0004T1

20-FEB-2018 13:23
S:\TSGUNITS\Signals\WorkGroups\Sig Mgmt\Armstrong\02004_sm_ele_xxx.dgn
sarmstrong