DocuSign Envelope ID: 433DB173-3068-4B1B-8CD6-2830F5383906

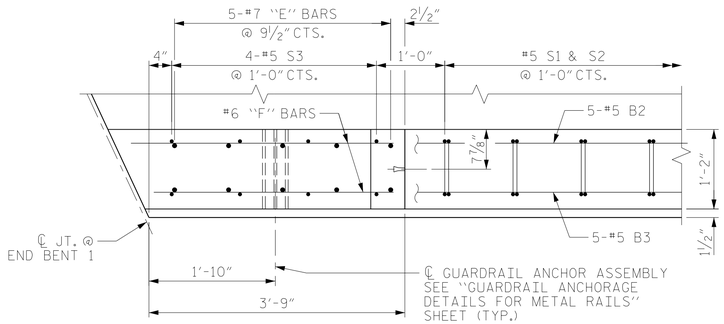

PLAN VIEW @ END BENT 1

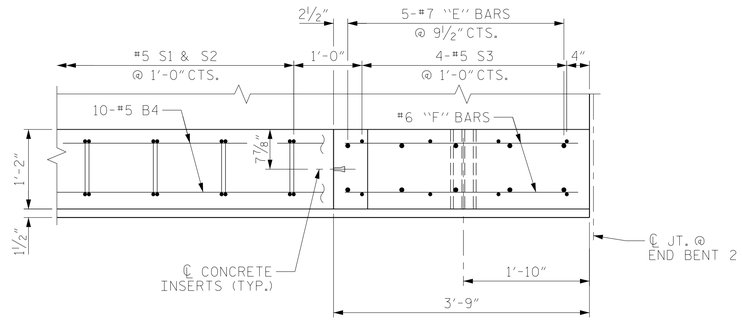

PLAN VIEW @ END BENT 2

BAR TYPES

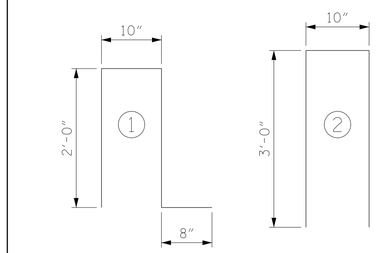

ALL BAR DIMENSIONS ARE OUT TO OUT

BILL OF MATERIAL FOR CONCRETE PARAPET

BAR	NO.	SIZE	TYPE	LENGTH	WEIGHT
*B1	70	#5	STR.	26'-7"	1941
*B2	5	#5	STR.	21'-10"	114
*B3	5	#5	STR.	21'-6"	112
*B4	10	#5	STR.	5'-6"	57
*E1	4	#7	STR.	3'-6"	29
*E2	4	#7	STR.	3'-11"	32
*E3	4	#7	STR.	4'-4"	35
*E4	4	#7	STR.	4'-9"	39
*E5	4	#7	STR.	5'-1"	42
*F1	2	#6	STR.	2'-1"	6
*F2	2	#6	STR.	1'-10"	6
*F3	2	#6	STR.	3'-6"	11
*F4	1	#6	STR.	3'-5"	5
*F5	2	#6	STR.	3'-0"	9
*F6	1	#6	STR.	3'-8"	6
*F7	2	#6	STR.	3'-3"	10
*S1	217	#5	1	5'-6"	1245
*S2	209	#5	2	6'-10"	1490
*S3	8	#5	2	11'-2"	93

*EPOXY COATED REINFORCING STEEL 5,096 LBS.

CLASS AA CONCRETE 31.1 C.Y.

CONCRETE PARAPET 216.8 L.F.

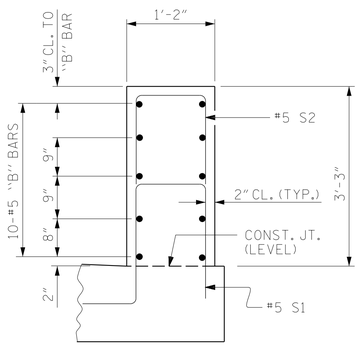

SECTION THROUGH LEFT PARAPET

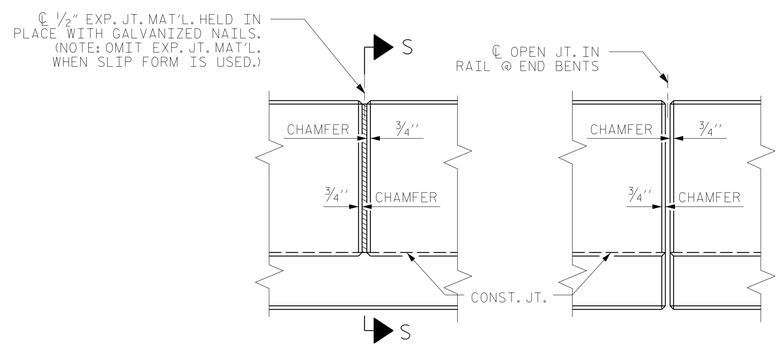

ELEVATION AT EXPANSION JOINTS

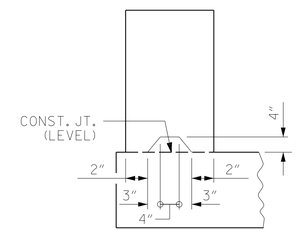

SECTION S-S

AT DAM IN OPEN JOINT
(THIS IS TO BE USED ONLY
WHEN SLIP FORM IS USED)

PARAPET DETAILS

NOTES:

THE CONCRETE PARAPET IN EACH SPAN SHALL NOT BE CAST UNTIL ALL SLAB CONCRETE IN THAT SPAN HAS BEEN CAST AND HAS REACHED A MINIMUM COMPRESSION STRENGTH OF 3,000 PSI.

ALL REINFORCING STEEL IN THE CONCRETE PARAPET SHALL BE EPOXY COATED.

SEE "RAIL POST SPACINGS AND END OF RAIL DETAILS" SHEET FOR CONCRETE INSERT DETAILS.

SEE "GUARDRAIL ANCHORAGE DETAILS FOR METAL RAILS" SHEET FOR GUARDRAIL ANCHOR ASSEMBLY.

GROOVED CONTRACTION JOINTS, ½" IN DEPTH, SHALL BE TOOLED IN ALL EXPOSED FACES OF THE PARAPET AND IN ACCORDANCE WITH ARTICLE 825-10(B) OF THE STANDARD SPECIFICATIONS. THE CONTRACTION JOINT SHALL BE LOCATED AT EACH THIRD POINT BETWEEN PARAPET EXPASION JOINTS. ONLY ONE CONTRACTION JOINT IS REQUIRED AT MIDPOINT OF PARAPET SEGMENTS LESS THAN 20 FEET IN LENGTH AND NO CONTRACTION JOINTS ARE REQUIRED FOR THOSE SEGMENTS LESS THAN 10 FEET IN LENGTH.

#5 "S" BARS MAY BE SHIFTED AS NECESSARY TO CLEAR EXPNASION JOINTS IN PARAPET.

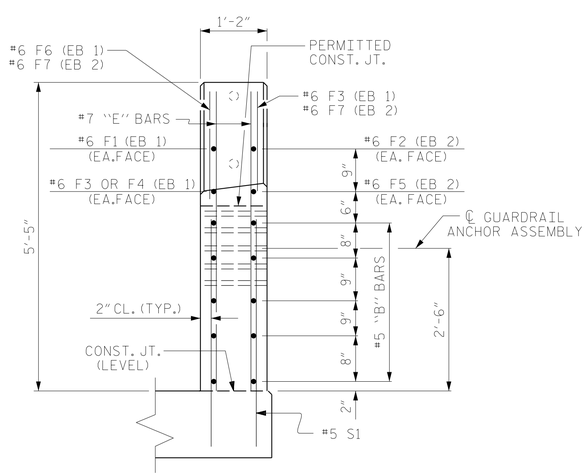

END VIEW

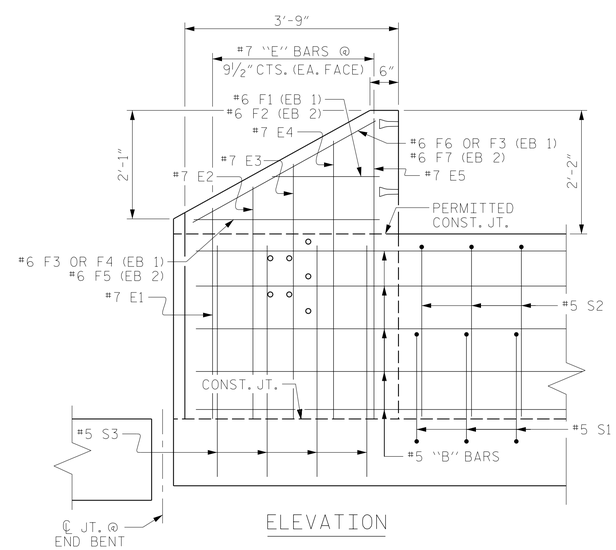

ELEVATION

END POST FOR TWO BAR RAIL

BAR CALLOUTS FOR TYPICAL FOR EACH END BENT
UNLESS NOTED OTHERWISE

PROJECT NO. U-5798A
CUMBERLAND COUNTY
STATION: 76+80.00 -L-

SHEET 2 OF 5

NORTH CAROLINA PROFESSIONAL SEAL 18442 ENGINEER RICHARD LEON BOLLINGER JR.
1/14/2022

RS&H
RS&H Architects-Engineers-Planners, Inc.
8521 Six Forks Road, Suite 400
919-926-4100 FAX 919-846-9080
www.rsandh.com
North Carolina License Nos. 50073 * F-0493 * C-28

STATE OF NORTH CAROLINA
DEPARTMENT OF TRANSPORTATION
RALEIGH
SUPERSTRUCTURE

CONCRETE PARAPET DETAILS

RIGHT LANE

REVISIONS							SHEET NO.
NO.	BY:	DATE:	NO.	BY:	DATE:		S2-21
1			3				TOTAL SHEETS
2			4				43

DOCUMENT NOT CONSIDERED FINAL UNLESS ALL SIGNATURES COMPLETED

DRAWN BY :	TWL	DATE :	12/2020
CHECKED BY :	MRA	DATE :	12/2020
DESIGN ENGINEER OF RECORD:	RLB	DATE :	09/2021

11/24/2021
\\rsandh.com\files\Transportation\P\1031782004_U-5798 (Gillis Hill Road)_P&D\Design\Structures\CAD\Right Lane Bridge\402_041_U5798A_SMU_2MR_S-21_250501.dgn
CuanyN

STR. #2