DocuSign Envelope ID: 433DB173-3068-4B1B-8CD6-2830F5383906

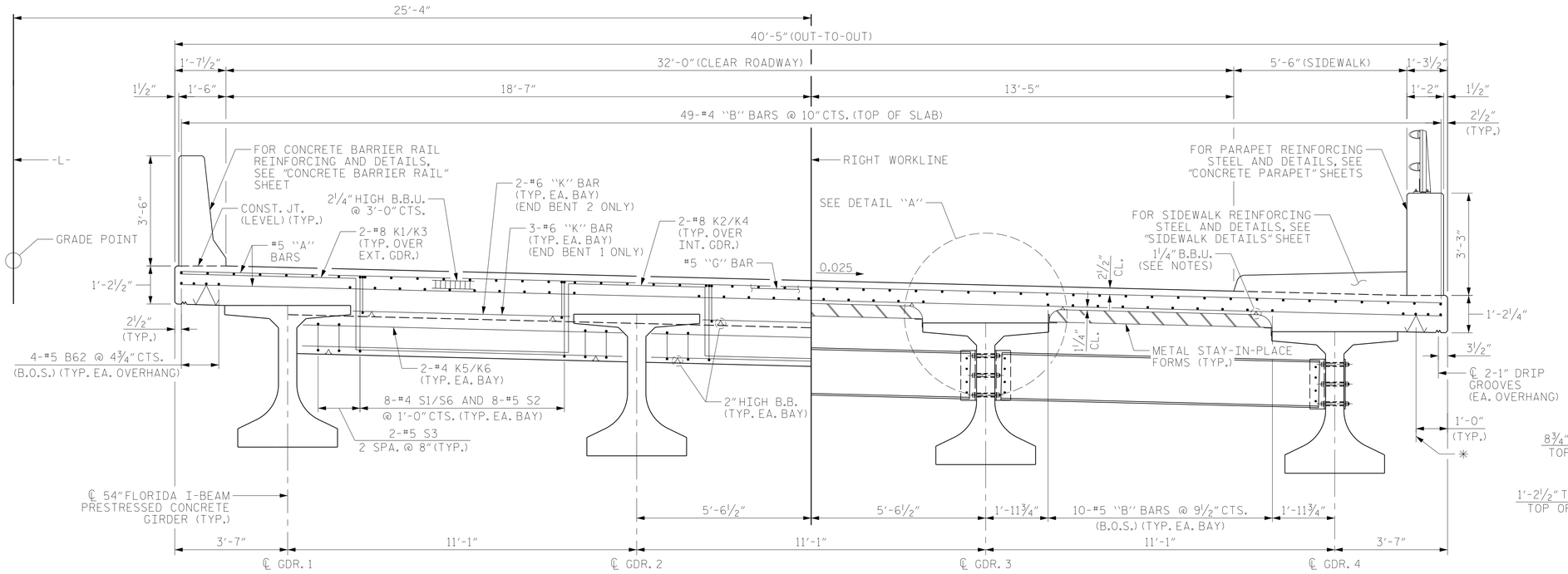

HALF SECTION AT END BENT

HALF SECTION AT INTERMEDIATE DIAPHRAGM

TYPICAL SECTION

NOTES:

PROVIDE 1¼" HIGH BEAM BOLSTERS UPPERS AT 4'-0" CTS. ATOP THE METAL STAY-IN-PLACE FORMS TO SUPPORT THE BOTTOM MAT OF "A" BARS. WHEN USING REMOVABLE FORMS, PROVIDE CONTINUOUS HIGH CHAIRS FOR METAL DECK (CHCM) AT 4'-0" CTS. WITH A HEIGHT TO SUPPORT THE BOTTOM MAT OF "A" BARS A CLEAR DISTANCE OF 2½" ABOVE THE TOP OF THE REMOVABLE FORM.

LONGITUDINAL STEEL MAY BE SHIFTED SLIGHTLY, AS NECESSARY, TO AVOID INTERFERENCE WITH STIRRUPS IN PRESTRESSED CONCRETE GIRDERS.

PREVIOUSLY CAST CONCRETE IN A CONTINUOUS UNIT SHALL HAVE ATTAINED MINIMUM COMPRESSIVE STRENGTH OF 3,000 PSI BEFORE ADDITIONAL CONCRETE IS CAST IN THE UNIT.

CONCRETE BARRIER RAIL IN A CONTINUOUS UNIT SHALL NOT BE CAST UNTIL ALL DECK SLAB CONCRETE IN THAT UNIT HAS BEEN CAST AND HAS ATTAINED A MINIMUM COMPRESSIVE STRENGTH OF 3,000 PSI.

* BEAM BOLSTERS REQUIRED TO MAINTAIN A MIN. 2½" CL. TO B.O.S. (BEAM BOLSTER HEIGHT WILL VARY WITH BUILDUPS) (TYP. EA. OVERHANG)

B.O.S. = BOTTOM OF SLAB

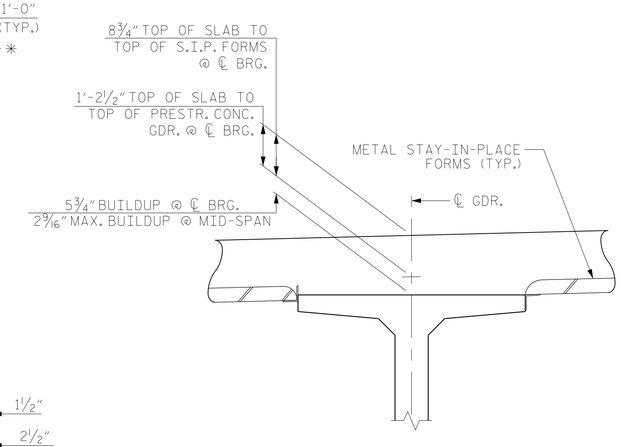

DETAIL "A"

REINFORCING NOT SHOWN FOR CLARITY

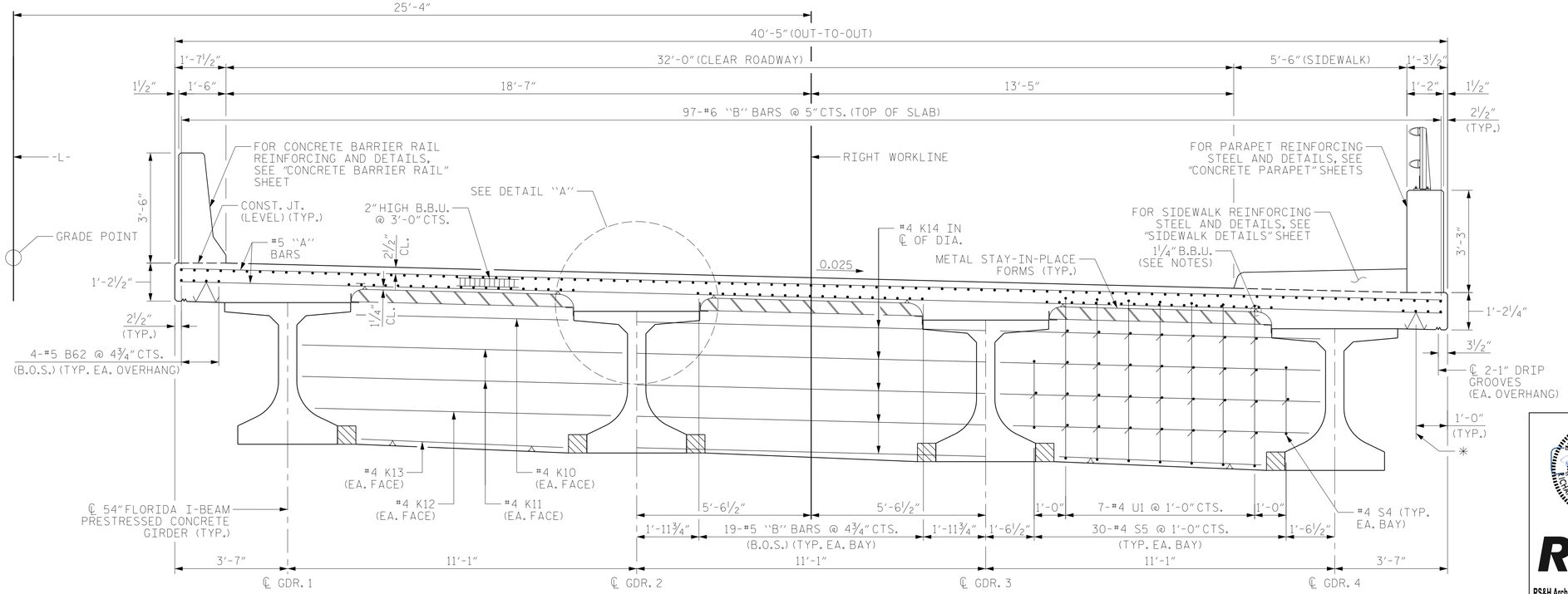

TYPICAL SECTION AT BENT DIAPHRAGM

PROJECT NO. U-5798A

CUMBERLAND COUNTY

STATION: 76+80.00 -L-

SHEET 1 OF 2

STATE OF NORTH CAROLINA
DEPARTMENT OF TRANSPORTATION
RALEIGH

SUPERSTRUCTURE

TYPICAL SECTION

RIGHT LANE

NORTH CAROLINA PROFESSIONAL SEAL 18442 ENGINEER RICHARD LEON BOLLINGER, JR.

1/14/2022

RS&H

RS&H Architects-Engineers-Planners, Inc.
8521 Six Forks Road, Suite 400
919-926-4100 FAX 919-846-9080
www.rsandh.com
North Carolina License Nos. 50073 * F-0493 * C-28

REVISIONS							
NO.	BY:	DATE:	NO.	BY:	DATE:	SHEET NO.	
1			3			S2-5	
2			4			TOTAL SHEETS	
						43	

DRAWN BY : MRA DATE : 04/2020
CHECKED BY : NSC DATE : 04/2021
DESIGN ENGINEER OF RECORD: RLB DATE : 09/2021

DOCUMENT NOT CONSIDERED FINAL UNLESS ALL SIGNATURES COMPLETED

11/24/2021
\\rsandh.com\files\Transportation\P\1031782004_U-5798 (Gillis Hill Road)_P&D\Design\Structures\CAD\Right Lane Bridge\402_009_U5798A_SMU_TS_S-5_250501.dgn
CuanyN

STR. #2