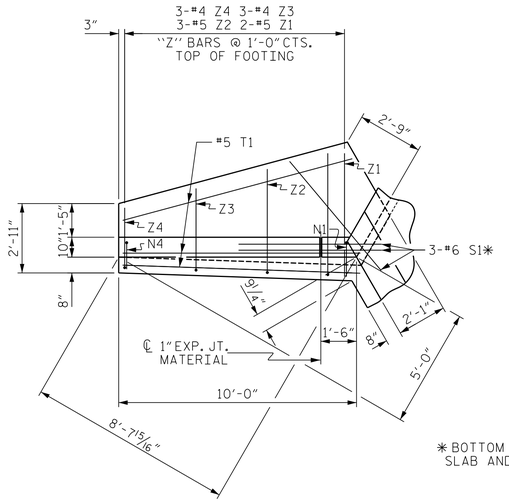

PLAN W2

* BOTTOM OF FLOOR SLAB AND FOOTING

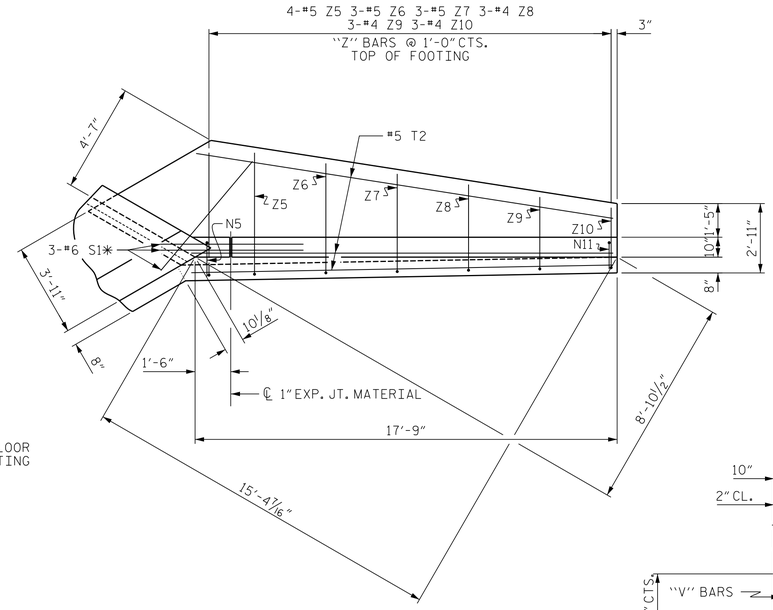

PLAN W1

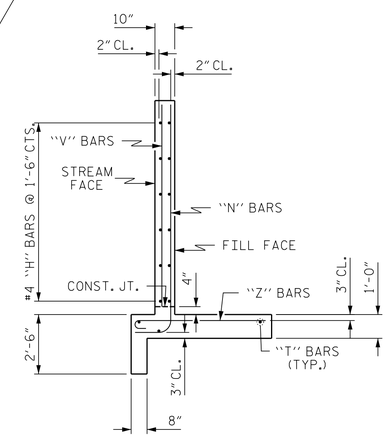

TYPICAL WING SECTION

BAR TYPES

ALL BAR DIMENSIONS ARE OUT TO OUT.

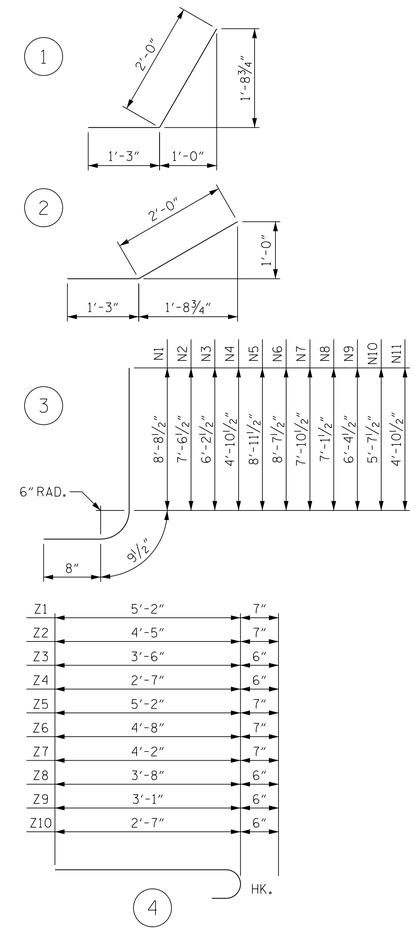

BILL OF MATERIAL

BAR	NO.	SIZE	TYPE	LENGTH	WEIGHT
H1	6	#4	STR	8'-1"	32
H2	2	#4	STR	7'-3"	10
H3	2	#4	STR	3'-11"	5
H4	12	#4	1	3'-3"	26
H5	2	#4	STR	8'-10"	12
H6	6	#4	STR	15'-10"	63
H7	2	#4	STR	14'-4"	19
H8	2	#4	STR	8'-3"	11
H9	2	#4	STR	2'-3"	3
H10	12	#4	2	3'-3"	26
H11	2	#4	STR	16'-4"	22
N1	2	#5	3	10'-2"	21
N2	3	#5	3	9'-0"	28
N3	3	#4	3	7'-8"	15
N4	3	#4	3	6'-4"	13
N5	2	#5	3	10'-5"	22
N6	2	#5	3	10'-1"	21
N7	3	#5	3	9'-4"	29
N8	3	#5	3	8'-7"	27
N9	3	#4	3	7'-10"	16
N10	3	#4	3	7'-1"	14
N11	3	#4	3	6'-4"	13
S1	6	#6	STR	6'-0"	54
T1	3	#5	STR	10'-0"	31
T2	3	#5	STR	17'-9"	56
V1	2	#4	STR	8'-1"	11
V2	3	#4	STR	7'-0"	14
V3	3	#4	STR	5'-8"	11
V4	3	#4	STR	4'-4"	9
V5	2	#4	STR	8'-4"	11
V6	2	#4	STR	8'-0"	11
V7	3	#4	STR	7'-3"	15
V8	3	#4	STR	6'-6"	13
V9	3	#4	STR	5'-9"	12
V10	3	#4	STR	5'-0"	10
V11	3	#4	STR	4'-3"	9
Z1	2	#5	4	5'-9"	12
Z2	3	#5	4	5'-0"	16
Z3	3	#4	4	4'-0"	8
Z4	3	#4	4	3'-1"	6
Z5	4	#5	4	5'-9"	24
Z6	3	#5	4	5'-3"	16
Z7	3	#5	4	4'-9"	15
Z8	3	#4	4	4'-2"	8
Z9	3	#4	4	3'-7"	7
Z10	3	#4	4	3'-1"	6

REINFORCING STEEL FOR 2 WINGS 833 LBS

CLASS A CONCRETE

2 WINGS	12.2	CY
1 HEADWALL	0.9	CY
1 END CURTAIN WALL	0.6	CY
2 EDGE BEAMS	1.2	CY
TOTAL	14.9	CY

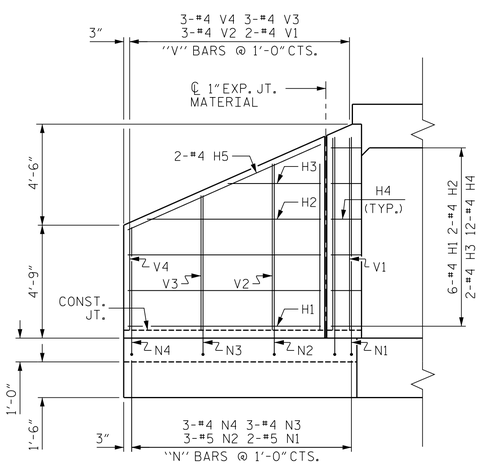

ELEVATION W2

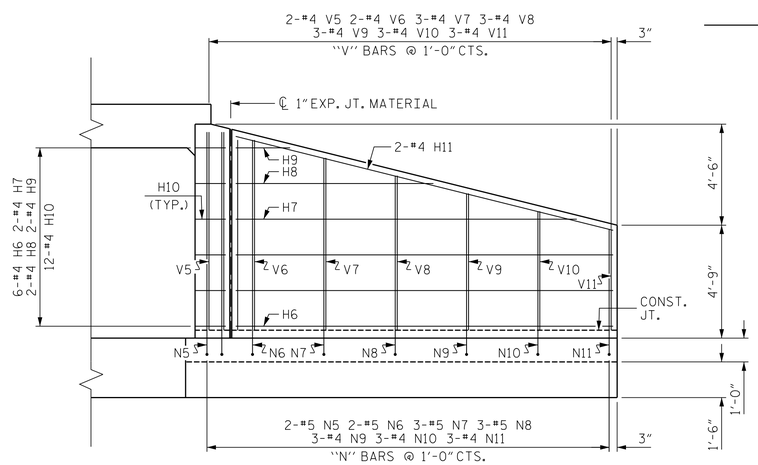

ELEVATION W1

NORTH CAROLINA PROFESSIONAL SEAL ENGINEER HAROLD L. WILLIS 20277
DocuSigned by: Harold Willis
F0287FC0223461...
12/13/2021

DOCUMENT NOT CONSIDERED FINAL UNLESS ALL SIGNATURES COMPLETED

PROJECT NO. U-5738
ROWAN COUNTY
STATION: 41+20.00 -L-

SHEET 7 OF 9

STATE OF NORTH CAROLINA
DEPARTMENT OF TRANSPORTATION
RALEIGH

STANDARD WINGS FOR CONCRETE BOX CULVERT

H = 8'-0" SLOPE = 2:1
60° SKEW

V&M
Vaughn & Melton
Consulting Engineers
Asheville, North Carolina
828-253-2796
Raleigh, NC 919-977-9455
Charlotte, NC 704-357-0488
Boone, NC 828-355-9933
Tri-Cities, TN 423-467-8401
Knoxville, TN 865-546-5800
Spartanburg, SC 864-574-4775
Charleston, SC 843-974-5650
Middlesboro, KY 606-248-6600
Atlanta, GA 770-627-3509
Copyright © 2006 Vaughn & Melton, Inc. All Rights Reserved

REVISIONS						
NO.	BY:	DATE:	NO.	BY:	DATE:	SHEET NO. C-7
1			3			TOTAL SHEETS 9
2			4			

ASSEMBLED BY : WDC DATE : 10-2017
CHECKED BY : RTS DATE : 11-2017
DRAWN BY : CCJ 11/99
CHECKED BY : RWW 03/00
REV. 6/19 MAA/THC

STD. NO. CW6008