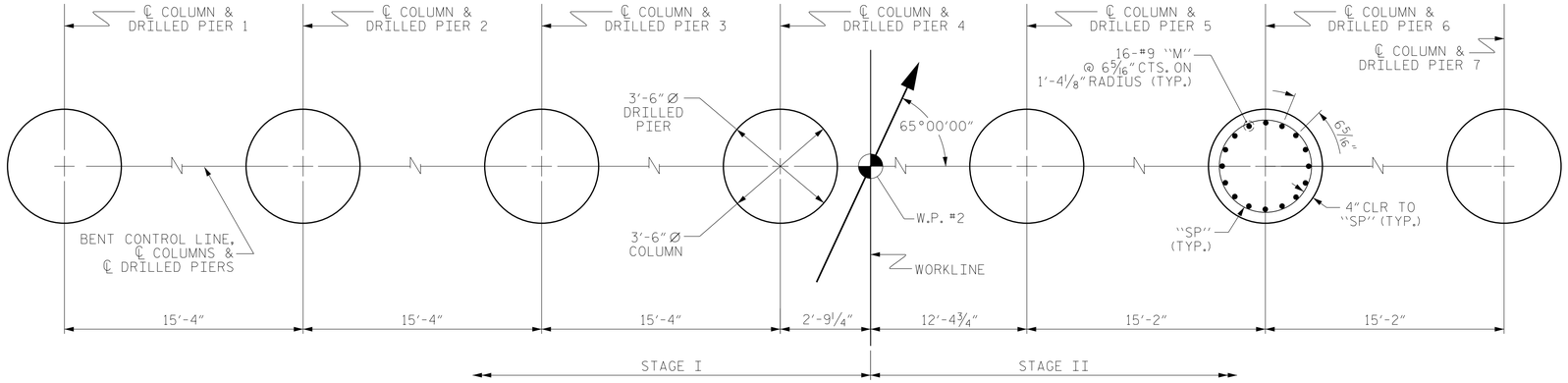

PLAN OF DRILLED PIERS & COLUMNS

BILL OF MATERIAL

FOR BENT 1 STAGE I

BAR	NO.	SIZE	TYPE	LENGTH	WEIGHT
B1	6	#9	4	36'-6"	745
B2	6	#9	STR	57'-3"	1168
B3	8	#5	STR	59'-5"	496
B4	6	#9	4	30'-9"	627
B9	6	#4	STR	12'-5"	50
B10	2	#5	STR	25'-1"	52
M1	32	#9	4	26'-10"	2919
M2	32	#9	4	31'-10"	3463
S1	33	#5	2	13'-1"	450
S2	31	#5	2	14'-1"	455
U1	58	#4	3	6'-10"	265
U2	5	#4	3	7'-2"	24
REINFORCING STEEL					10,714 LBS.
SP-1	2	✳	5	463'-8"	967
SP-2	2	✳	5	568'-8"	1186
SPIRAL COLUMN REINF. STEEL					2,153 LBS.

✳ THE SPIRAL REINFORCING STEEL SHALL BE W31 OR D-31 COLD DRAWN WIRE OR #5 PLAIN OR DEFORMED BAR.

CLASS A CONCRETE BREAKDOWN

POUR #2 (COLUMNS)	3.6 C.Y.
POUR #3 (CAP)	43.4 C.Y.
TOTAL CLASS A CONCRETE	47.0 C.Y.

DRILLED PIERS:

DRILLED PIER CONCRETE POUR #1 (DRILLED PIERS)	29.9 C.Y.
3'-6"Ø DRILLED PIER NOT IN SOIL	35.4 LIN. FT.
3'-6"Ø DRILLED PIER IN SOIL	50.6 LIN. FT.
PERMANENT STEEL CASING FOR 3'-6"Ø DRILLED PIER	40.0 LIN. FT.
CSL TUBES	400.0 LIN. FT.

FOR BENT 1 STAGE II

BAR	NO.	SIZE	TYPE	LENGTH	WEIGHT
B5	6	#9	4	36'-6"	745
B6	6	#9	STR	45'-5"	927
B7	8	#5	STR	46'-3"	386
B8	6	#9	STR	18'-11"	386
B9	6	#4	STR	12'-5"	50
B11	2	#5	STR	12'-2"	25
M2	16	#9	4	31'-10"	1732
M3	32	#9	4	29'-10"	3246
S1	33	#5	2	13'-1"	450
S2	22	#5	2	14'-1"	323
U1	47	#4	3	6'-10"	215
U2	5	#4	3	7'-2"	24
REINFORCING STEEL					8,509 LBS.
SP-2	1	✳	5	568'-8"	593
SP-3	2	✳	5	524'-11"	1095
SPIRAL COLUMN REINF. STEEL					1,688 LBS.

✳ THE SPIRAL REINFORCING STEEL SHALL BE W31 OR D-31 COLD DRAWN WIRE OR #5 PLAIN OR DEFORMED BAR.

CLASS A CONCRETE BREAKDOWN

POUR #2 (COLUMNS)	2.7 C.Y.
POUR #3 (CAP)	35.2 C.Y.
TOTAL CLASS A CONCRETE	37.9 C.Y.

DRILLED PIERS:

DRILLED PIER CONCRETE POUR #1 (DRILLED PIERS)	23.7 C.Y.
3'-6"Ø DRILLED PIER NOT IN SOIL	26.6 LIN. FT.
3'-6"Ø DRILLED PIER IN SOIL	37.9 LIN. FT.
PERMANENT STEEL CASING FOR 3'-6"Ø DRILLED PIER	30.0 LIN. FT.
CSL TUBES	314.0 LIN. FT.

BAR TYPES

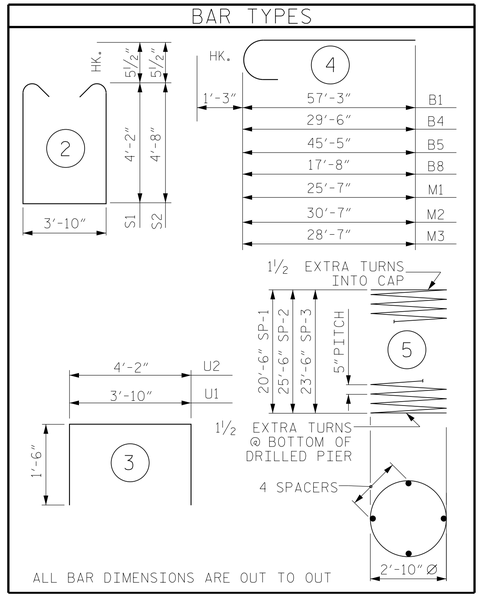

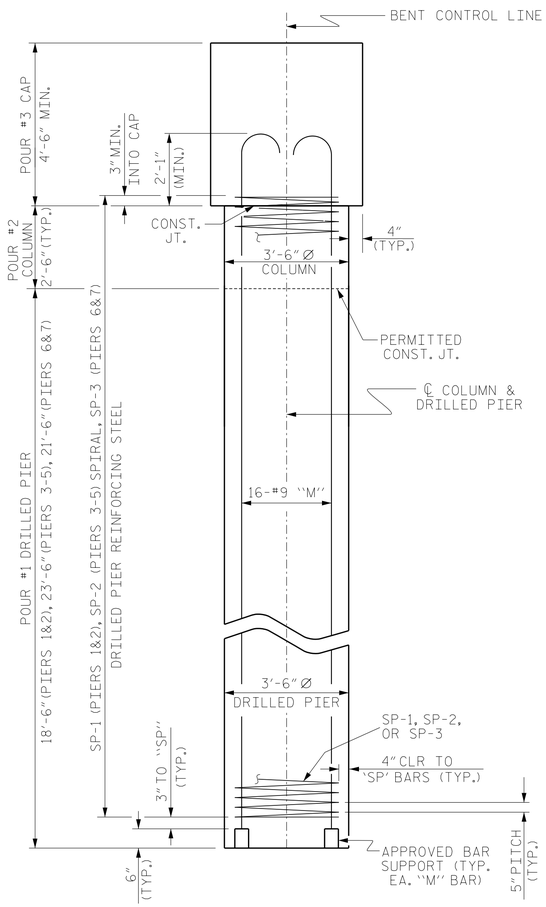

END ELEVATION

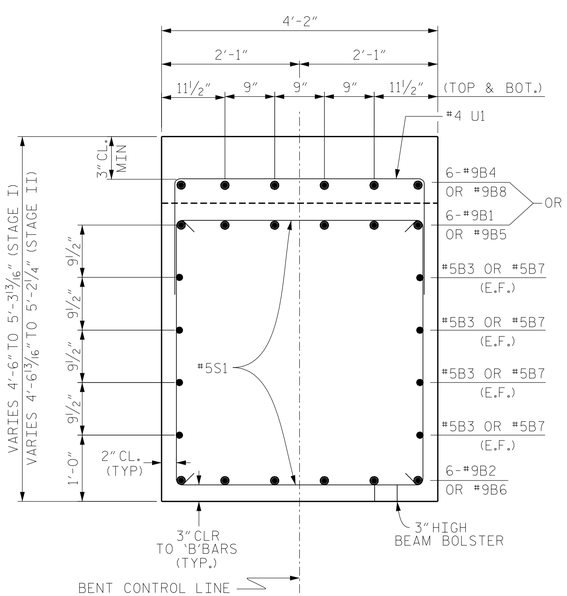

SECTION THRU CAP

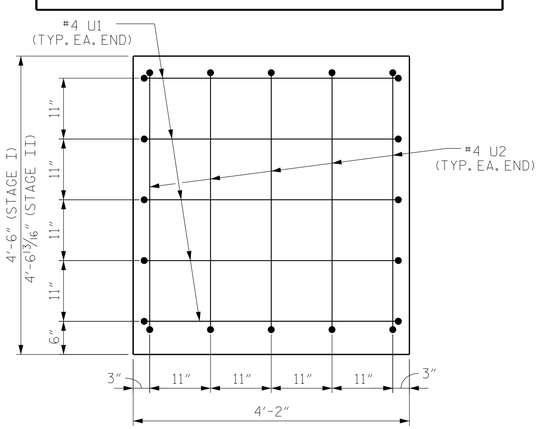

END OF CAP VIEW

(TYPICAL BOTH ENDS)

DOCUMENT NOT CONSIDERED FINAL UNLESS ALL SIGNATURES COMPLETED

Vaughn & Melton
Consulting Engineers
Asheville, North Carolina
828-253-2796
Raleigh, NC 919-977-9455
Charlotte, NC 704-357-0488
Boone, NC 828-355-9933
Tri-Cities, TN 423-467-8401
Knoxville, TN 865-546-5800
Spartanburg, SC 864-574-4775
Charleston, SC 843-974-5650
Middlesboro, KY 606-248-6600
Atlanta, GA 770-627-3509

Copyright © 2006 Vaughn & Melton, Inc. All Rights Reserved

NORTH CAROLINA PROFESSIONAL SEAL ENGINEER HARDY L. WILLIS
Hardy Willis
12/13/2021

DWN. BY: FRJ DATE: 11/18
CHKD. BY: CDB DATE: 11/18
DES. EGR. OF RECORD: CDB DATE: 11/18

PROJECT NO. U-5738
ROWAN COUNTY
STATION: 70+72.50 -L-

SHEET 3 OF 3

STATE OF NORTH CAROLINA
DEPARTMENT OF TRANSPORTATION
RALEIGH

SUBSTRUCTURE
BENT No. 1
DETAILS

REVISIONS						
NO.	BY:	DATE:	NO.	BY:	DATE:	
1			3			
2			4			

SHEET NO. S-30
TOTAL SHEETS 39