DocuSign Envelope ID: 8F7AB499-D268-4014-A2EA-B17F2B4965E7

PROJECT REFERENCE NO.	SHEET NO.
U-5738	UC-3C
DESIGNED BY: WAP	11/1/2021
DRAWN BY: WAP	
CHECKED BY:	
APPROVED BY:	
REVISED:	
NORTH CAROLINA DEPARTMENT OF TRANSPORTATION	
UTILITIES ENGINEERING SEC. PHONE:(919)707-6690 FAX:(919)250-4151	UTILITY CONSTRUCTION PLANS ONLY

NORTH CAROLINA PROFESSIONAL ENGINEER SEAL 52550 WILLIAM A. POPE

DocuSigned by: William A. Pope — 6E6B7BAC8C7B4D0...

UTILITY CONSTRUCTION

DOCUMENT NOT CONSIDERED FINAL UNTIL ALL SIGNATURES ARE COMPLETED

PROJECT TYPICAL DETAILS

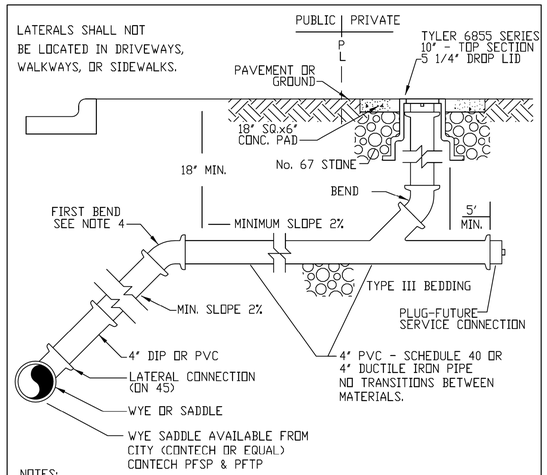

NOTES:

1. THE FULL LENGTH OF THE SERVICE DITCH SHALL BE COMPACTED IN 6" LAYERS WITH MECHANICAL TAMP, TO 95% STANDARD PROCTOR.
2. THE CITY SHALL MAKE TAPS ON EXISTING LINES
3. BENDS 1/16, 1/8, 1/4 AS REQUIRED.
4. FIRST BEND SHALL OCCUR BEHIND BACK OF CURB UNLESS SPECIFICALLY APPROVED BY THE UTILITIES ENGINEERING MANAGER.
5. ALL LATERALS 60' OR LONGER SHALL BE 6".
6. NO MATERIAL TRANSITIONS (LATERAL & STACK MUST BE ALL PVC OR ALL DIP)
7. WYES ONLY, NO TEES. SADDLES MAY ONLY BE USED ON EXISTING SEWER LINES.

CITY OF SALISBURY, N.C. STANDARD DETAIL	DATE: OCTOBER 17, 2006 AMENDED: MAY 19, 2009
SEWER SYSTEMS TAP & STUB-OUT	NOT TO SCALE
	STANDARD SS-5

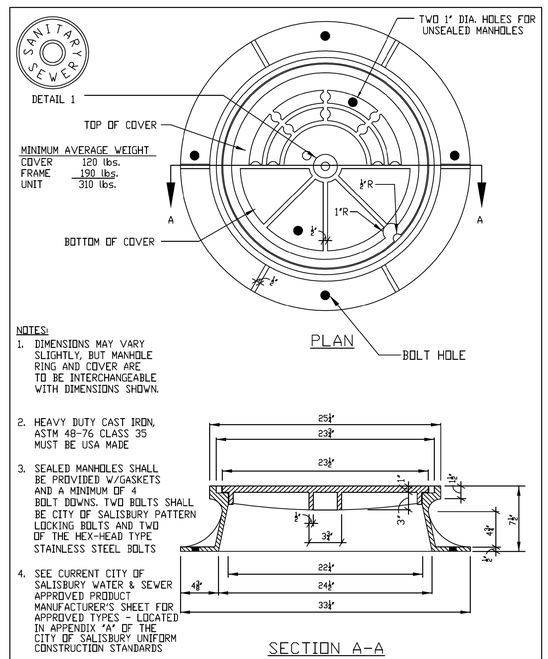

NOTES:

1. DIMENSIONS MAY VARY SLIGHTLY, BUT MANHOLE RING AND COVER ARE TO BE INTERCHANGEABLE WITH DIMENSIONS SHOWN.
2. HEAVY DUTY CAST IRON, ASTM 48-76 CLASS 35 MUST BE USA MADE
3. SEALED MANHOLES SHALL BE PROVIDED W/GASKETS AND A MINIMUM OF 4 BOLT DOWNS. TWO BOLTS SHALL BE CITY OF SALISBURY PATTERN LOCKING BOLTS AND TWO OF THE HEX-HEAD TYPE STAINLESS STEEL BOLTS
4. SEE CURRENT CITY OF SALISBURY WATER & SEWER APPROVED PRODUCT MANUFACTURER'S SHEET FOR APPROVED TYPES - LOCATED IN APPENDIX "A" OF THE CITY OF SALISBURY UNIFORM CONSTRUCTION STANDARDS

CITY OF SALISBURY, N.C. STANDARD DETAIL	DATE: OCTOBER 17, 2006
SEWER SYSTEMS MANHOLE COVER	NOT TO SCALE
	STANDARD SS-6

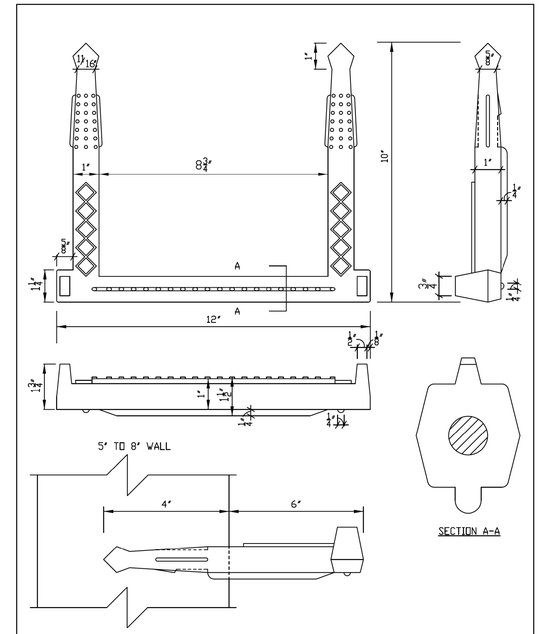

CITY OF SALISBURY, N.C. STANDARD DETAIL	DATE: JANUARY 1, 1991
SEWER SYSTEMS PLASTIC MANHOLE STEP	NOT TO SCALE
	STANDARD SS-7

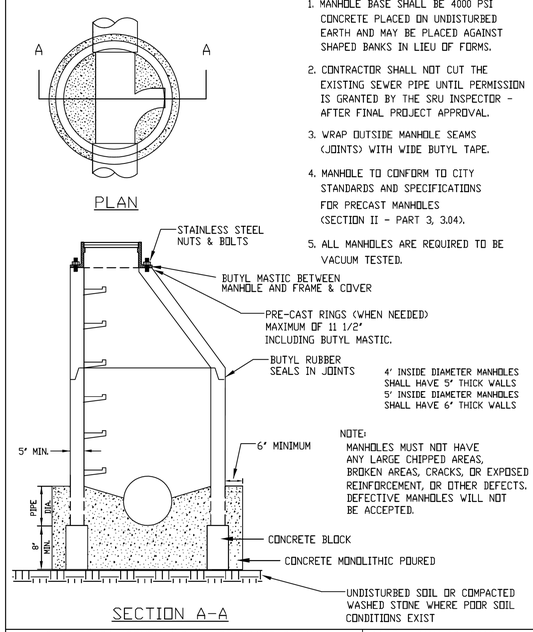

NOTES:

1. MANHOLE BASE SHALL BE 4000 PSI CONCRETE PLACED ON UNDISTURBED EARTH AND MAY BE PLACED AGAINST SHAPED BANKS IN LIEU OF FORMS.
2. CONTRACTOR SHALL NOT CUT THE EXISTING SEWER PIPE UNTIL PERMISSION IS GRANTED BY THE SRU INSPECTOR - AFTER FINAL PROJECT APPROVAL.
3. WRAP OUTSIDE MANHOLE SEAMS (JOINTS) WITH WIDE BUTYL TAPE.
4. MANHOLE TO CONFORM TO CITY STANDARDS AND SPECIFICATIONS FOR PRECAST MANHOLES (SECTION II - PART 3, 3.04).
5. ALL MANHOLES ARE REQUIRED TO BE VACUUM TESTED.

NOTE:
MANHOLES MUST NOT HAVE ANY LARGE CHIPPED AREAS, BROKEN AREAS, CRACKS, OR EXPOSED REINFORCEMENT, OR OTHER DEFECTS. DEFECTIVE MANHOLES WILL NOT BE ACCEPTED.

CITY OF SALISBURY, N.C. STANDARD DETAIL	DATE: MAY 19, 2009
SEWER SYSTEMS DOGHOUSE MANHOLE	NOT TO SCALE
	STANDARD SS-11

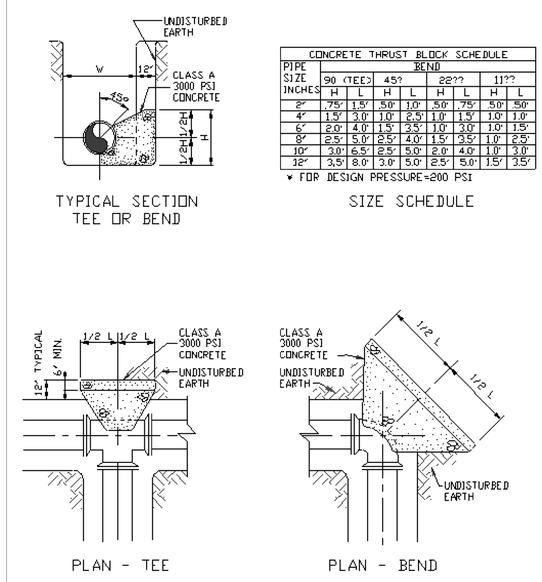

CONCRETE THRUST BLOCK SCHEDULE

PIPE SIZE INCHES	BEND 90 (TEE) H	L	45° H	L	22½° H	L	11¼° H	L
2"	.75'	1.5'	.50'	1.0'	.50'	.75'	.50'	.50'
4"	1.5'	3.0'	1.0'	2.5'	1.0'	1.5'	1.0'	1.0'
6"	2.0'	4.0'	1.5'	3.5'	1.0'	3.0'	1.0'	1.5'
8"	2.5'	5.0'	2.5'	4.0'	1.5'	3.5'	1.0'	2.5'
10"	3.0'	6.5'	2.5'	5.0'	2.0'	4.0'	1.0'	3.0'
12"	3.5'	8.0'	3.0'	5.0'	2.5'	5.0'	1.5'	3.5'

* FOR DESIGN PRESSURE=200 PSI

CITY OF SALISBURY, N.C. STANDARD DETAIL	DATE: JANUARY 1, 1991
WATER SYSTEMS THRUST BLOCKING	NOT TO SCALE
	STANDARD W-1

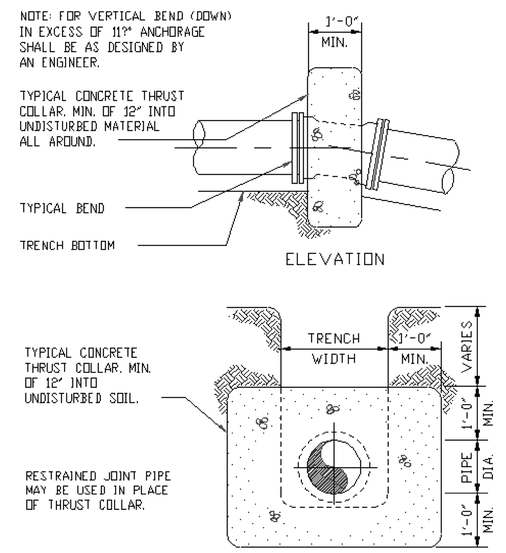

CITY OF SALISBURY, N.C. STANDARD DETAIL	DATE: JANUARY 1, 1991
WATER SYSTEMS THRUST COLLAR	NOT TO SCALE
	STANDARD W-2