DocuSign Envelope ID: 1227471F-F09B-4661-8908-803F905CD481

PROJECT REFERENCE NO.	SHEET NO.
U-5738	Sig 5.1

EDI MODEL 2018ECL-NC CONFLICT MONITOR PROGRAMMING DETAIL

(remove jumpers and set switches as shown)

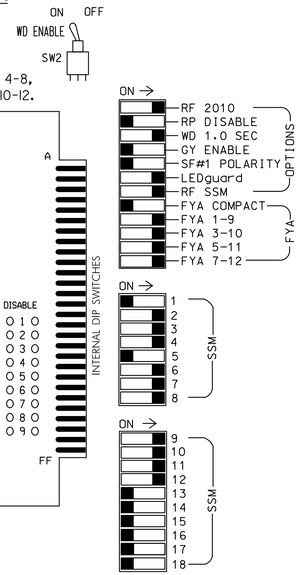

■ = DENOTES POSITION OF SWITCH

NOTES:

1. Card is provided with all diode jumpers in place. Removal of any jumper allows its channels to run concurrently.
2. Ensure jumpers SEL2-SEL5 and SEL9 are present on the monitor board.
3. Ensure that Red Enable is active at all times during normal operation.
4. Connect serial cable from conflict monitor to comm. port 1 of 2070 controller. Ensure conflict monitor communicates with 2070.

NOTES

1. To prevent "flash-conflict" problems, insert red flash program blocks for all unused vehicle load switches in the output file. The installer shall verify that signal heads flash in accordance with the Signal Plans.
2. Program phases 4 and 8 for Dual Entry.
3. Enable Simultaneous Gap-Out for all Phases.
4. Program phases 2 and 6 for Variable Initial and Gap Reduction.
5. Program phases 2 and 6 for Startup In Green.
6. Program phases 2 and 6 for Yellow Flash, and overlaps 1 and 2 as Wag Overlaps.
7. If this signal will be managed by an ATMS software, enable controller and detector logging for all detectors used at this location.
8. The cabinet and controller are part of the Salisbury Signal System.

EQUIPMENT INFORMATION

CONTROLLER.....2070
CABINET.....332 W/ AUX
SOFTWARE.....ECONOLITE OASIS
CABINET MOUNT.....BASE
OUTPUT FILE POSITIONS...18 WITH AUX. OUTPUT FILE
LOAD SWITCHES USED.....S1,S2,S4,S5,S7,S8,S10,S11, AUX S1,AUX S2,AUX S4,AUX S5
PHASES USED.....1,2,3,4,5,6,7,8
OVERLAP "A".....1+2
OVERLAP "B".....3+4
OVERLAP "C".....5+6
OVERLAP "D".....7+8

SIGNAL HEAD HOOK-UP CHART

LOAD SWITCH NO.	S1	S2	S3	S4		S5	S6	S7	S8	S9	S10		S11	S12	AUX S1	AUX S2	AUX S3	AUX S4	AUX S5	AUX S6
CMU CHANNEL NO.	1	2	13	3		4	14	5	6	15	7		8	16	9	10	17	11	12	18
PHASE	1	2	2 PED	3		4	4 PED	5	6	6 PED	7		8	8 PED	OLA	OLB	SPARE	OLC	OLD	SPARE
SIGNAL HEAD NO.	11★	21,22	NU	22	31★	41,42	NU	51★	61,62	NU	62	71★	81,82	NU	11★	31★	NU	51★	71★	NU
RED		128		✳		101			134		✳		107							
YELLOW	✳	129				102		✳	135				108							
GREEN		130				103			136				109							
RED ARROW															A121	A124		A114	A101	
YELLOW ARROW				117							123				A122	A125		A115	A102	
FLASHING YELLOW ARROW															A123	A126		A116	A103	
GREEN ARROW	127			118	118			133			124	124								

NU = Not Used
✳ Denotes install load resistor. See load resistor installation detail this sheet.
★ See pictorial of head wiring in detail this sheet.

FYA SIGNAL WIRING DETAIL

(wire signal heads as shown)

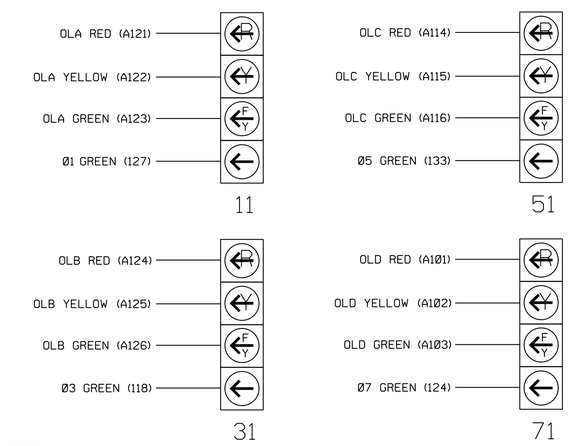

NOTE

The sequence display for signal heads 11, 31, 51, and 71 requires special logic programming. See sheet 2 for programming instructions.

INPUT FILE POSITION LAYOUT

(front view)

		1	2	3	4	5	6	7	8	9	10	11	12	13	14
FILE "I"	U	SLOT	SLOT	SLOT	SLOT	SLOT	SLOT	SLOT	SLOT	SLOT	SLOT	SLOT	SLOT	SLOT	FS DC ISOLATOR
	L	EMPTY	EMPTY	EMPTY	EMPTY	EMPTY	EMPTY	EMPTY	EMPTY	EMPTY	EMPTY	EMPTY	EMPTY	EMPTY	ST DC ISOLATOR
FILE "J"	U	SLOT	SLOT	SLOT	SLOT	SLOT	SLOT	SLOT	SLOT	SLOT	SLOT	SLOT	SLOT	SLOT	SLOT
	L	EMPTY	EMPTY	EMPTY	EMPTY	EMPTY	EMPTY	EMPTY	EMPTY	EMPTY	EMPTY	EMPTY	EMPTY	EMPTY	EMPTY

EX.: 1A, 2A, ETC. = LOOP NO.'S

FS = FLASH SENSE
ST = STOP TIME

LOAD RESISTOR INSTALLATION DETAIL

(install resistors as shown below)

ACCEPTABLE VALUES

VALUE (ohms)	WATTAGE
1.5K - 1.9K	25W (min)
2.0K - 3.0K	10W (min)

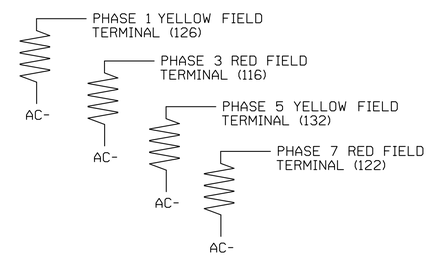

VIDEO DETECTOR NOTE

Install a video detection system for vehicle detection. Perform installation according to manufacturer's directions and NCDOT engineer-approved mounting locations to accomplish the detection schemes shown on the Signal Design Plans.

THIS ELECTRICAL DETAIL IS FOR
THE SIGNAL DESIGN: 09-0991T1
DESIGNED: NOVEMBER 2021
SEALED: 12/3/2021
REVISED: N/A

Temporary Design 1
Electrical Detail - Sheet 1 of 2

DOCUMENT NOT CONSIDERED FINAL UNLESS ALL SIGNATURES COMPLETED

ELECTRICAL AND PROGRAMMING DETAILS FOR:

SR 2528 (Julian Rd)
at
I-85/US 601 SB Ramps and
SR 2762 (Klumac Rd)

Division 9 | Rowan County | Salisbury

PLAN DATE: November 2021 | REVIEWED BY: B. Phillips
PREPARED BY: Z. "Gavin" Teng | REVIEWED BY:

REVISIONS	INIT.	DATE

750 N.Greenfield Pkwy,Garner,NC 27529

SEAL 032179 NORTH CAROLINA PROFESSIONAL ENGINEER ZHAOLONG TENG

DocuSigned by: Zhaolong Teng 12/3/2021
SIGNATURE DATE

SIG. INVENTORY NO. 09-0991T1

PREPARED IN THE OFFICE OF:
Accelerate Engineering, PLLC
875 Walnut Street, Suite 316
Cary, NC 27511
Tel: 919.263.5678 Fax: 919.263.5687
NC License No. P-1442

$$$$SYSTIME$$$$
$$$$SYSDATE$$$$
$$$$USERNAME$$$$