DocuSign Envelope ID: 38148B10-BDF2-43B9-9BAF-C9AC6621F523

PROJECT REFERENCE NO.	SHEET NO.
U-5896	Sig. 11.1

EDI MODEL 2018ECLip-NC CONFLICT MONITOR PROGRAMMING DETAIL

(remove jumpers and set switches as shown)

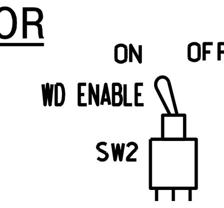

REMOVE DIODE JUMPERS 1-6, 1-9, 1-15, 2-6, 2-9, 2-15, 6-9, 6-15 and 9-15.

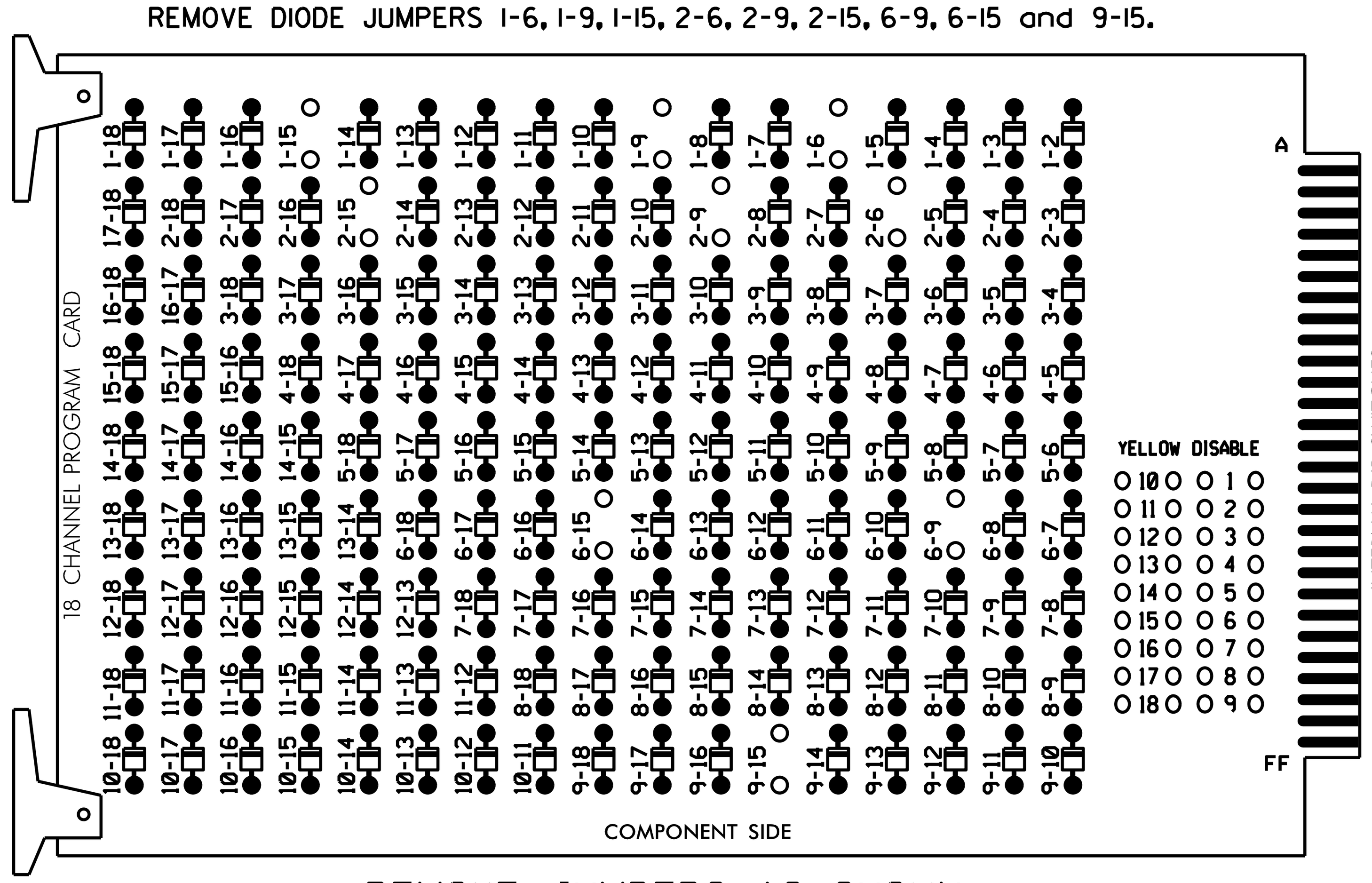

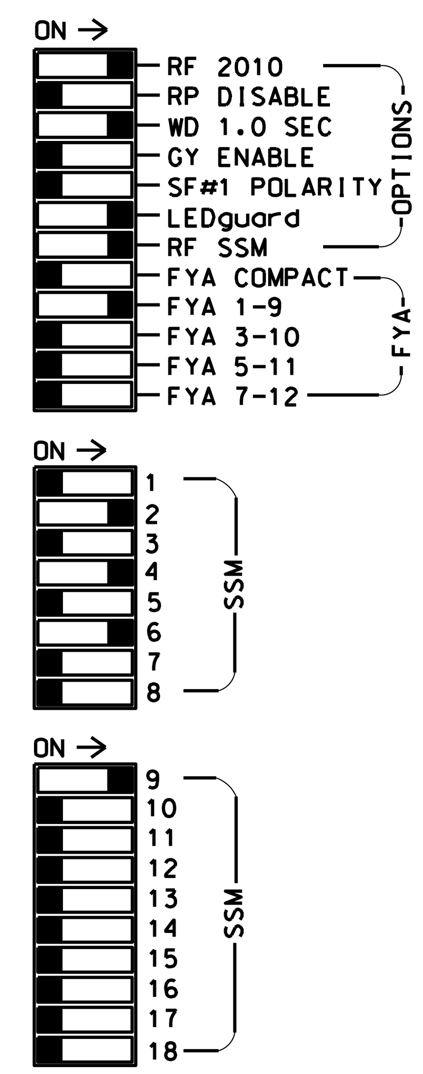

REMOVE JUMPERS AS SHOWN

NOTES:

1. Card is provided with all diode jumpers in place. Removal of any jumper allows its channels to run concurrently.
2. Ensure jumpers SEL2-SEL5 and SEL9 are present on the monitor board.
3. Ensure that Red Enable is active at all times during normal operation.
4. Integrate monitor with Ethernet network in cabinet.

NOTES

1. To prevent "flash-conflict" problems, insert red flash program blocks for all unused vehicle load switches in the output file. The installer shall verify that signal heads flash in accordance with the Signal Plans.
2. Program simultaneous gap out for all phaese.
3. Program controller to start up in phase 2 Green and phase 6 Walk.
4. If this signal will be managed by an ATMS software, enable controller and detector logging for all detectors used at this location.
5. The cabinet and controller are part of the High Point Signal System.

EQUIPMENT INFORMATION

CONTROLLER..............2070LX
CABINET.................332 W/AUX
SOFTWARE................ECONOLITE ASC/3-2070
CABINET MOUNT...........BASE
OUTPUT FILE POSITIONS...18 WITH AUX. OUTPUT FILE
LOAD SWITCHES USED......S1, S2, S5, S8, S9 and AUX S1.
PHASES USED.............1, 2, 4, 6 and 6PED.
OVERLAP "A".............✱
OVERLAP "B".............NOT USED
OVERLAP "C".............NOT USED
OVERLAP "D".............NOT USED

✱ See overlap programming detail on sheet 2

SIGNAL HEAD HOOK-UP CHART

LOAD SWITCH NO.	S1	S2	S3	S4	S5	S6	S7	S8	S9	S10	S11	S12	AUX S1	AUX S2	AUX S3	AUX S4	AUX S5	AUX S6
CMU CHANNEL NO.	1	2	13	3	4	14	5	6	15	7	8	16	9	10	17	11	12	18
PHASE	1	2	2 PED	3	4	4 PED	5	6	6 PED	7	8	8 PED	OLA	OLB	SPARE	OLC	OLD	SPARE
SIGNAL HEAD NO.	11★	21,22	NU	NU	41,42	NU	NU	61,62	P61, P62	NU	NU	NU	11★	NU	NU	NU	NU	NU
RED		128			101			134										
YELLOW	✱	129			102			135										
GREEN		130			103													
RED ARROW													A121					
YELLOW ARROW													A122					
FLASHING YELLOW ARROW													A123					
GREEN ARROW	127							136										
(Don't Walk hand)									119									
(Walk pedestrian)									121									

NU = Not Used

✱ Denotes install load resistor. See load resistor installation detail this sheet.

★ See pictorial of head wiring in detail this sheet.

COUNTDOWN PEDESTRIAN SIGNAL OPERATION

Countdown Ped Signals are required to display timing only during Ped Clearance Interval. Consult Ped Signal Module user's manual for instructions on selecting this feature.

INPUT FILE POSITION LAYOUT

(front view)

FILE		1	2	3	4	5	6	7	8	9	10	11	12	13	14
FILE "I"	U	Ø1 1A	SLOT EMPTY	SLOT EMPTY	SLOT EMPTY	SLOT EMPTY	SLOT EMPTY	SLOT EMPTY	SLOT EMPTY	SLOT EMPTY	SLOT EMPTY	SLOT EMPTY	SLOT EMPTY	Ø6 PED DC ISOLATOR	FS DC ISOLATOR
	L	NOT USED												NOT USED	ST DC ISOLATOR
FILE "J"	U	SLOT EMPTY	SLOT EMPTY	SLOT EMPTY	WIRED INPUT ⊗	SLOT EMPTY	SLOT EMPTY	SLOT EMPTY	SLOT EMPTY	SLOT EMPTY	SLOT EMPTY	SLOT EMPTY	SLOT EMPTY	SLOT EMPTY	SLOT EMPTY
	L														

EX.: 1A, 2A, ETC. = LOOP NO.'S

FS = FLASH SENSE
ST = STOP TIME

⊗ Wired Input - Do not populate slot with detector card

INPUT FILE CONNECTION & PROGRAMMING CHART

LOOP NO.	LOOP TERMINAL	INPUT FILE POS.	PIN NO.	DETECTOR NO.	NEMA PHASE	CALL	EXTEND TIME	DELAY TIME	ADDED INITIAL	DETECTOR TYPE
1A [1]	TB2-1,2	I1U	56	1	1	YES		15		S
	-	J4U	48	26	6	YES				S
PED PUSH BUTTONS										
P61,P62	TB8-7,9	I13U	68	PED 6	6 PED					

NOTE:
INSTALL DC ISOLATORS IN INPUT FILE SLOT I13.

[1] Add jumper from I1-W to J4-W, on rear of input file.

INPUT FILE POSITION LEGEND: J2L
FILE J
SLOT 2
LOWER

FYA SIGNAL WIRING DETAIL

(wire signal heads as shown)

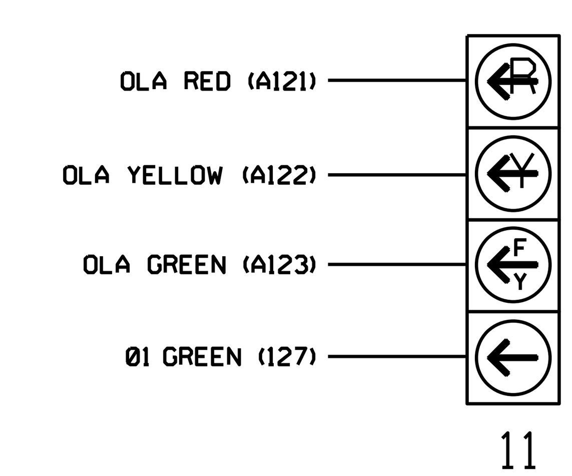

LOAD RESISTOR INSTALLATION DETAIL

(install resistors as shown)

ACCEPTABLE VALUES

VALUE (ohms)	WATTAGE
1.5K - 1.9K	25W (min)
2.0K - 3.0K	10W (min)

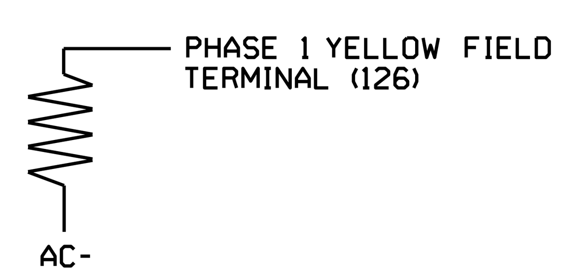

SPECIAL DETECTOR NOTE

Install a video detection system for vehicle detection. Perform installation according to manufacturer's recommendations and NCDOT engineer-approved mounting location(s) to accomplish the detection schemes shown on the Signal Design Plans.

For Detection Zone 1A the equipment placement and slots reserved for wired inputs are typical for NCDOT installation.

THIS ELECTRICAL DETAIL IS FOR
THE SIGNAL DESIGN: 07-1586 T3
DESIGNED: May 2021
SEALED: 09 December 2021
REVISED:

Electrical Detail - Sheet 1 of 2

MOTT MACDONALD
7621 Purfoy Road
Suite 115
Fuquay-Varina, NC 27526
www.mottmac.com
License No. F-0669

ELECTRICAL AND PROGRAMMING DETAILS FOR:

Prepared for the Offices of:
Transportation Mobility and Safety Division
ITS & Signals Management Section
750 N.Greenfield Pkwy, Garner, NC 27529

SR 1009 (S. Main Street)
at
US 29 NB Ramps

Division 7 Guilford County High Point

PLAN DATE: May 2021	REVIEWED BY: RW Thompson
PREPARED BY: DE Fowler	REVIEWED BY:

REVISIONS	INIT.	DATE

DOCUMENT NOT CONSIDERED FINAL UNLESS ALL SIGNATURES COMPLETED

SEAL
NORTH CAROLINA PROFESSIONAL ENGINEER SEAL 045256 BRENDAN A. LEHAN

DocuSigned by: Brendan Lehan 09 December 202
DATE

SIG. INVENTORY NO. 07-1586 T3

$$$$$SYSTIME$$$$$
$$$$$$$$$$$$$DGN$$$$$$$$$$$$$$$
$$$$USERNAME$$$$