DocuSign Envelope ID: C3CD2803-4788-499F-8C65-2C537A0CCD9E

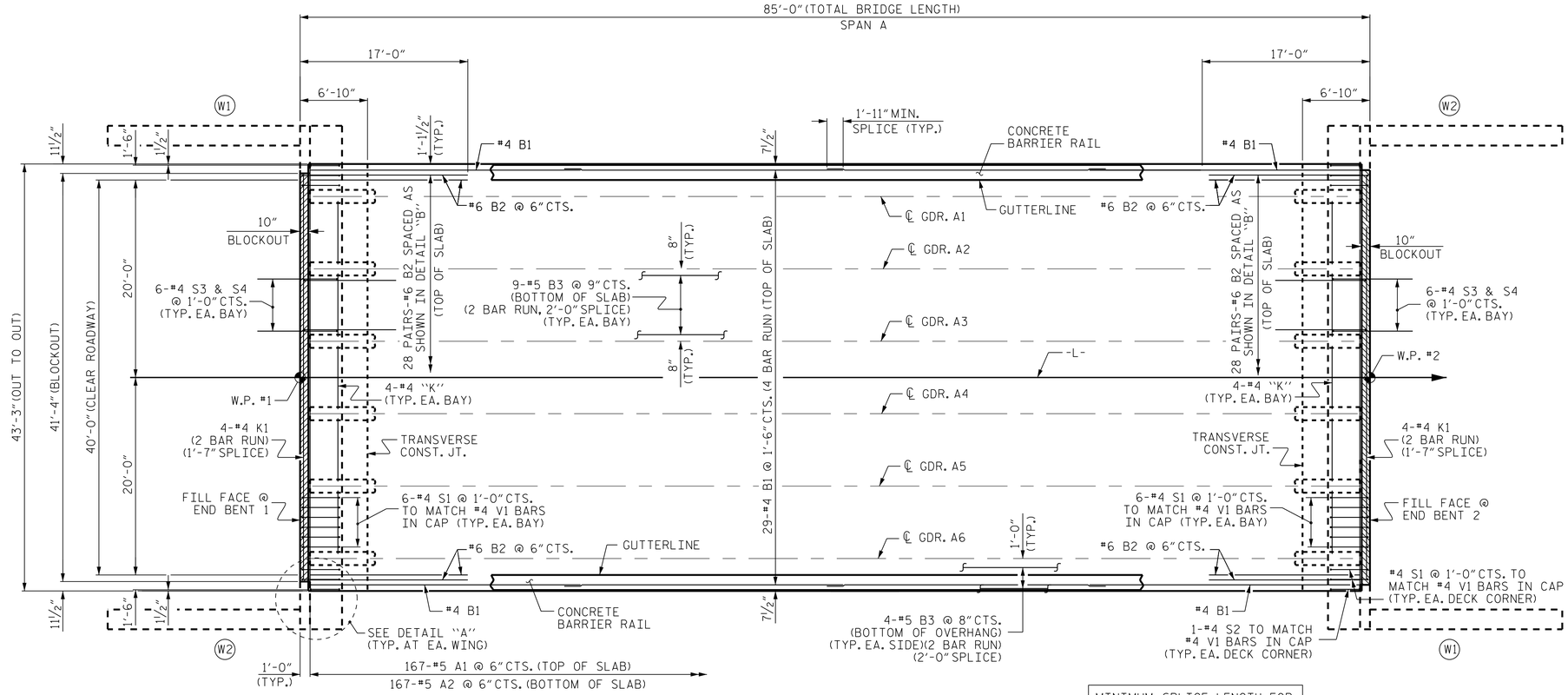

PLAN OF SPAN

MINIMUM SPLICE LENGTH FOR ALL #4 "B" EPOXY COATED BARS ON THIS SHEET IS 1'-11"

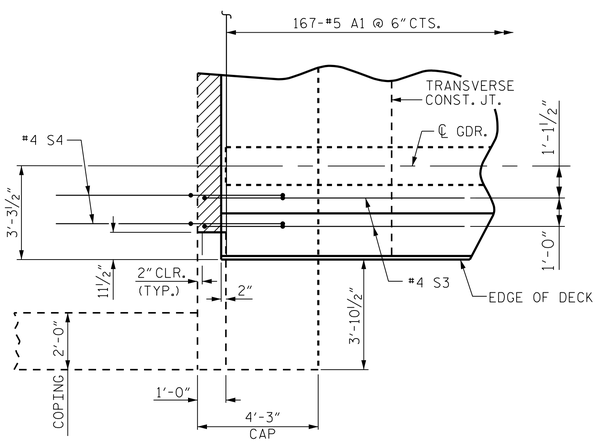

DETAIL "A"

S1 & S5 BARS ARE NOT SHOWN FOR CLARITY.

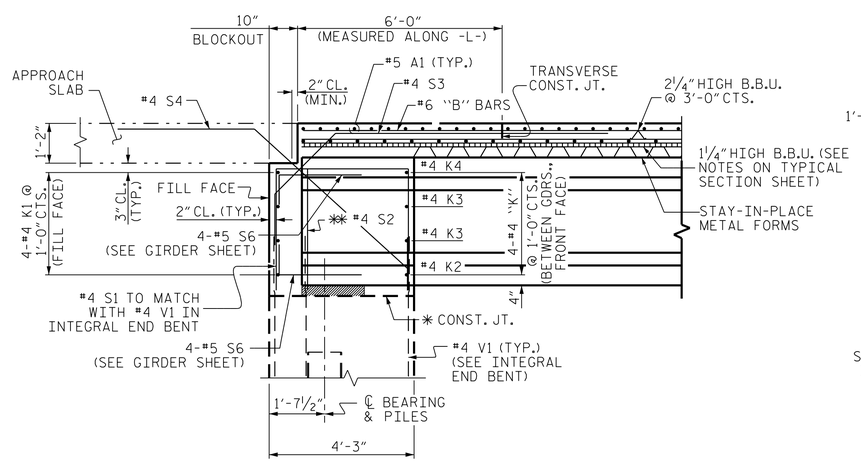

SECTION THROUGH INTEGRAL END BENT

✱ THE TOP SURFACE OF THE END BENT CAP EXCLUDING THE BEARING AREA, SHALL BE RAKED TO A DEPTH OF 1/4"

✱✱ #4 S2 LOCATED AT OUTSIDE EDGES OF INTEGRAL END BENT DIAPHRAGM. SEE PLAN OF SPANS AND TYPICAL SECTION FOR PLACEMENT DETAILS.

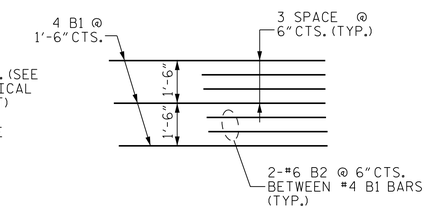

DETAIL "B"

SHOWING PLACEMENT OF #6 B2 BETWEEN #4 B1 BARS IN TOP OF SLAB IN INTEGRAL END BENT REGION.

PROJECT NO. B-5624
BRUNSWICK COUNTY
STATION: 17+46.00 -L-

STATE OF NORTH CAROLINA
DEPARTMENT OF TRANSPORTATION
RALEIGH

SUPERSTRUCTURE

PLAN OF SPAN

SPAN A

CDM Smith
CDM SMITH
5400 Glenwood Avenue, Suite 400
Raleigh, NC 27612-3228
NC COA No. F-1255

DOCUMENT NOT CONSIDERED FINAL UNLESS ALL SIGNATURES COMPLETED

DRAWN BY :	JJR	DATE :	9/20
CHECKED BY :	THF	DATE :	10/20
DESIGN ENGINEER :	VDK	DATE :	11/20

DWG. No.

NORTH CAROLINA PROFESSIONAL SEAL 16301 ENGINEER TING HSIUNG FANG
Ting Fang
60E43C9AEA60462...
7/20/2021

REVISIONS						SHEET NO.
NO.	BY:	DATE:	NO.	BY:	DATE:	S-06
1			3			TOTAL SHEETS
2			4			20

FILE: SFILES
DATE: SDATES
STYLES