DocuSign Envelope ID: 5595FF99-7FF6-444D-89B1-5F69227A8DDB

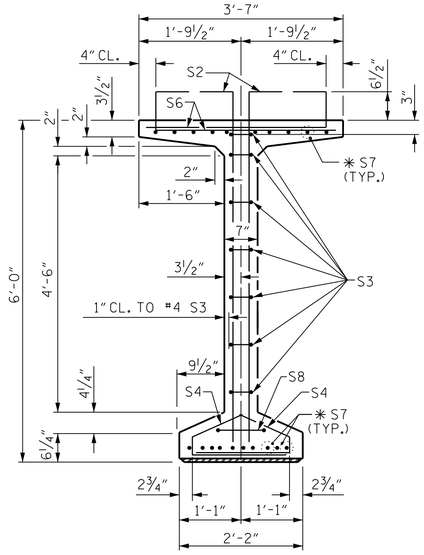

SECTION A-A

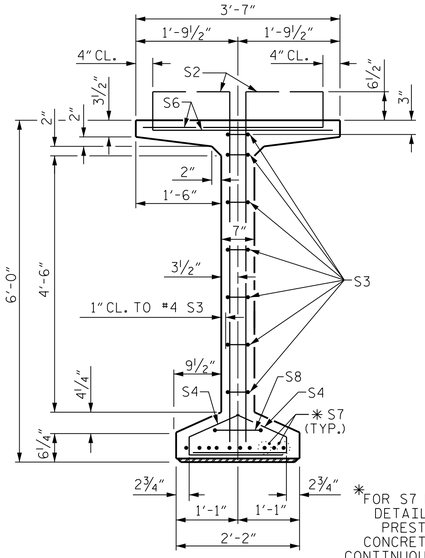

SECTION B-B

✱FOR S7 BARS. SEE DETAIL "C" OF PRESTRESSED CONCRETE GIRDER CONTINUOUS FOR LIVE LOAD DETAILS SHEET

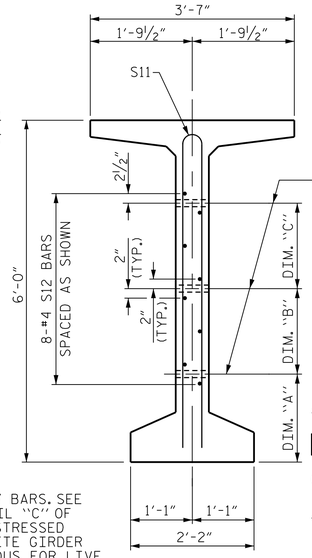

℄ 1½"Ø FORMED HOLE. SEE ELEVATION FOR LOCATION. FOR DIM. "A", "B" & "C" SEE "INTERMEDIATE STEEL DIAPHRAGMS" SHEET.)

SECTION C-C

(S1, S6 AND S9 BARS NOT SHOWN)

DEBONDING LEGEND

- ● FULLY BONDED STRANDS
- STRANDS DEBONDED FOR 6'-0" FROM END OF GIRDER
- STRANDS DEBONDED FOR 8'-0" FROM END OF GIRDER
- STRANDS DEBONDED FOR 10'-0" FROM END OF GIRDER
- STRANDS DEBONDED FOR 12'-0" FROM END OF GIRDER

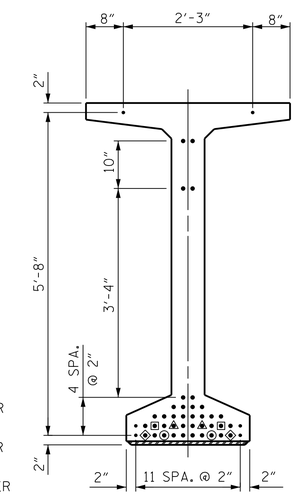

AT END OF GIRDER

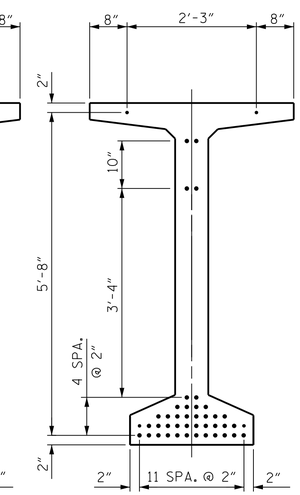

AT ℄ OF GIRDER

0.6"Ø LOW RELAXATION STRAND LAYOUT

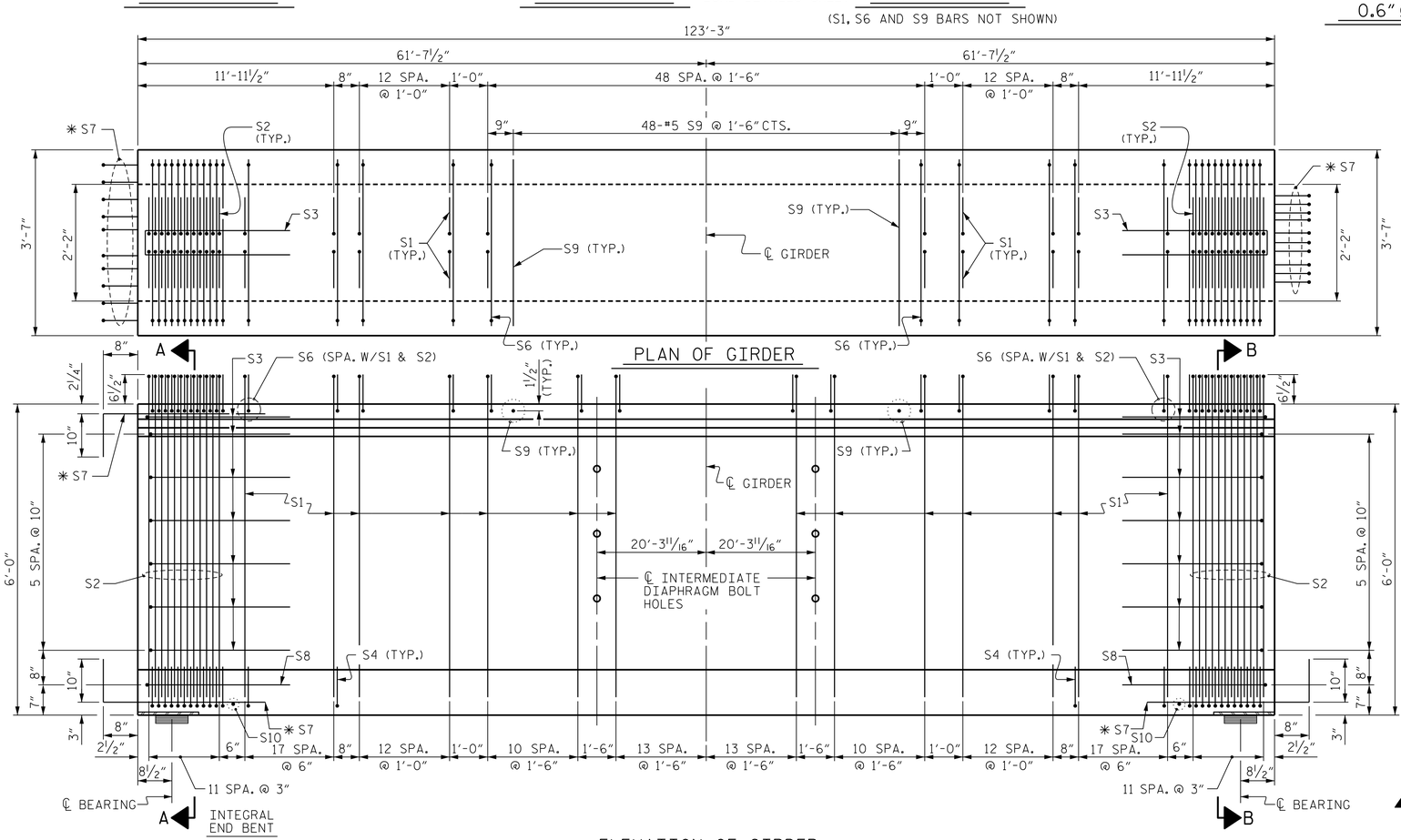

ELEVATION OF GIRDER

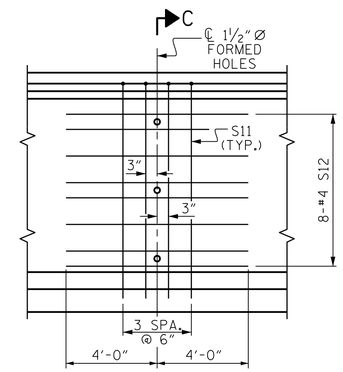

PARTIAL ELEVATION

SHOWING INTERMEDIATE STEEL DIAPHRAGM REINFORCING STEEL FOR GIRDER Nos. 1-10

0.6"Ø L.R. GRADE 270 STRANDS

AREA (SQUARE INCHES)	ULTIMATE STRENGTH (LBS. PER STRAND)	APPLIED PRESTRESS (LBS. PER STRAND)
0.217	58,600	43,950

REINFORCING STEEL FOR ONE GDR

BAR	NUMBER	SIZE	TYPE	LENGTH	WEIGHT
S1	222	#4	1	6'-11"	1026
S2	48	#5	1	6'-11"	346
S3	14	#4	2	8'-5"	79
S4	120	#4	3	3'-0"	240
S6	270	#5	4	4'-5"	1244
✱ S7	30	#5	STR	3'-8"	115
S8	2	#5	2	9'-0"	19
S9	48	#5	STR	3'-3"	163
S10	2	#3	STR	1'-10"	1
S11	8	#5	5	11'-6"	96
S12	16	#4	STR	8'-0"	86

✱ NOTE: S7 BARS SHALL BE BENT BEFORE SHIPMENT. HEAT BENDING SHALL NOT BE ALLOWED.

BAR TYPES

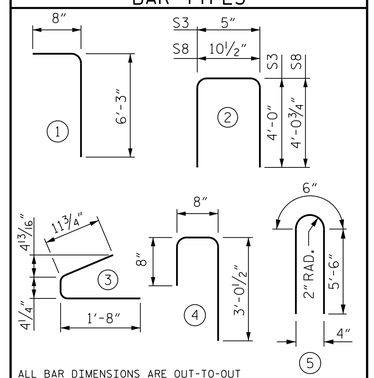

ALL BAR DIMENSIONS ARE OUT-TO-OUT

QUANTITIES FOR ONE GIRDER

	REINFORCING STEEL	8000 PSI CONCRETE	0.6"Ø L.R. STRANDS
	LB.	C.Y.	No.
GIRDER	3,415	26.4	44

GIRDERS REQUIRED

NUMBER	LENGTH	TOTAL LENGTH
10	123.25'	1232.50'

PROJECT NO. R-2233BB

RUTHERFORD COUNTY

STATION: 26+65.52 -Y3-

STATE OF NORTH CAROLINA
DEPARTMENT OF TRANSPORTATION
RALEIGH

STANDARD

72" PRESTRESSED CONCRETE MODIFIED BULB TEE CONTINUOUS FOR LIVE LOAD SPAN A

MODJESKI and MASTERS
Experience great bridges.
333 FAYETTEVILLE STREET, SUITE 500
RALEIGH, NC 27601
NC LICENSE NO. C-2979

NORTH CAROLINA PROFESSIONAL SEAL 032967 ENGINEER JASON R. DOUGHTY
4/22/2020
DocuSigned by: Jason R Doughty
5F73FA2DEA974E8...

DOCUMENT NOT CONSIDERED FINAL UNLESS ALL SIGNATURES COMPLETED

DESIGNED BY:	J. BORUTA	DATE :	MAY 2019
DRAWN BY:	K. WHITE	DATE :	MAY 2019
CHECKED BY:	B. LOFLIN	DATE :	JULY 2019
DESIGN ENGINEER OF RECORD:	J. DOUGHTY	DATE :	NOV 2019

DRAWN BY :	EEM 2/6/97	
CHECKED BY :	VAP 2/6/97	

REV. 6/13	MAA/GM
REV. 1/15	MAA/TMG
REV. 12/17	MAA/THC

REVISIONS

NO.	BY:	DATE:	NO.	BY:	DATE:
1			3		
2			4		

SHEET NO. S4-17

TOTAL SHEETS 45

STR. #4 STD. NO. PCG8 (SHT 2)

4/22/2020
404_031_R2233BB_SMU_G1_B00663.dgn