DocuSign Envelope ID: 8A191430-618C-4D61-8C78-DF0ED142B875

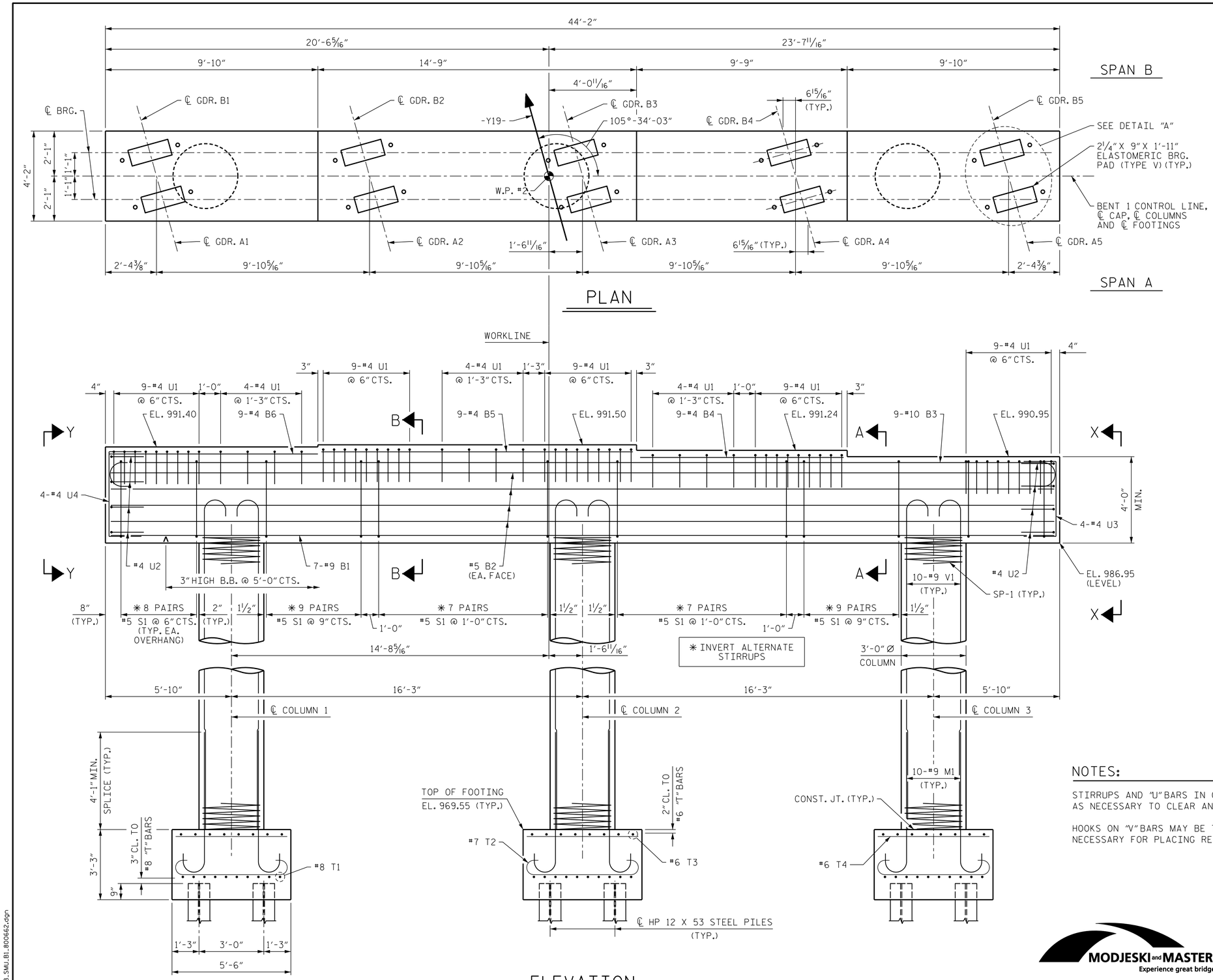

ELEVATION

DIMENSIONS AND REINFORCING STEEL ARE TYPICAL FOR EACH COLUMN AND FOOTING

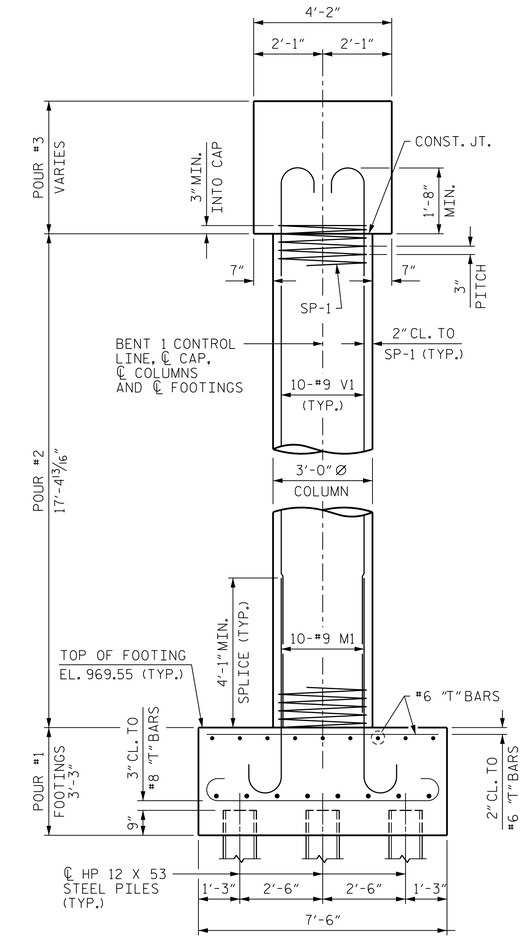

END ELEVATION

DETAILS, DIMENSIONS AND REINFORCING STEEL ARE TYPICAL FOR EACH COLUMN AND FOOTING

NOTES:

STIRRUPS AND "U" BARS IN CAP MAY BE SHIFTED AS NECESSARY TO CLEAR ANCHOR BOLTS.

HOOKS ON "V" BARS MAY BE TURNED AS NECESSARY FOR PLACING REINFORCING STEEL.

PROJECT NO. R-2233BB
RUTHERFORD COUNTY
STATION: 20+88.94 -Y19-

SHEET 1 OF 2

STATE OF NORTH CAROLINA
DEPARTMENT OF TRANSPORTATION
RALEIGH

SUBSTRUCTURE

BENT 1

MODJESKI and MASTERS
Experience great bridges.
333 FAYETTEVILLE STREET, SUITE 500
RALEIGH, NC 27601
NC LICENSE NO. C-2979

NORTH CAROLINA PROFESSIONAL SEAL 032967 ENGINEER JASON R. DOUGHTY
4/23/2020
DocuSigned by: Jason R Doughty
5F73FA2DEA974E8...

DOCUMENT NOT CONSIDERED FINAL UNLESS ALL SIGNATURES COMPLETED

REVISIONS								SHEET NO.
NO.	BY:	DATE:	NO.	BY:	DATE:			S3-26
1			3					TOTAL SHEETS
2			4					34

STR. #3

DESIGNED BY:	J. BORUTA	DATE :	JUNE 2019
DRAWN BY:	K. WHITE	DATE :	JUNE 2019
CHECKED BY:	B. LOFLIN	DATE :	JULY 2019
DESIGN ENGINEER OF RECORD:	J. DOUGHTY	DATE :	NOV 2019

4/22/2020
403.051.R2233BB.SMU.B1.B00662.dgn