DocuSign Envelope ID: 224E2E2C-6067-4E66-AE9C-8D463C250E1F

| PROJECT REFERENCE NO. | SHEET NO. |
|---|---|
| R-2233BB | 2A-5 |

## PAVEMENT SCHEDULE (FINAL)

| ITEM | DESCRIPTION | ITEM | DESCRIPTION | ITEM | DESCRIPTION | ITEM | DESCRIPTION | ITEM | DESCRIPTION | ITEM | DESCRIPTION | ITEM | DESCRIPTION | ITEM | DESCRIPTION |
|---|---|---|---|---|---|---|---|---|---|---|---|---|---|---|---|
| A1 | 7" CONCRETE | C4 | 3" S9.5C | D3 | VAR DEPTH I19.0C | E4 | 5" B25.0C | K1 | CHEMICAL STABILIZATION: 7" SOIL-CEMENT BASE OR 8"LIME-TREATED SOIL | R1 | 2'-6" CONCRETE CURB & GUTTER | R5 | 8"x12" CONCRETE CURB | U | EXIST. PAVEMENT |
| C1 | 1.5" S9.5B | C5 | VAR DEPTH S9.5C | E1 | 3" B25.0C | E5 | VAR DEPTH B25.0C | K2 | 8" CLASS IV SUBGRADE STABILIZATION | R2 | SHOULDER BERM GUTTER | R6 | CONCRETE EXPRESSWAY GUTTER | Z | MILLED RUMBLE STRIP |
| C2 | 3" S9.5B | D1 | 2.5" I19.0C | E2 | 4" B25.0C | J1 | 6" ABC | N1 | GEOTEXTILE FOR SOIL STABILIZATION | R3 | 5" CONC. ISLAND | S | 4" CONC. SIDEWALK | V1 | PAVEMENT MILLING |
| C3 | VAR DEPTH S9.5B | D2 | 4" I19.0C | E3 | 4.5" B25.0C | J2 | 8" ABC | N2 | GEOTEXTILE FOR PAVEMENT STABILIZATION | P | PRIME COAT | R4 | 2' MODIFIED VALLEY GUTTER | T | EARTH |

| ROADWAY DESIGN ENGINEER | PAVEMENT DESIGN ENGINEER |
|---|---|
| NORTH CAROLINA PROFESSIONAL SEAL 032003 ENGINEER DENNIS J. MORY | NORTH CAROLINA PROFESSIONAL SEAL 042404 ENGINEER JOSEPH T. HOLLAND |
| 8/25/2021 | 8/25/2021 |

**DOCUMENT NOT CONSIDERED FINAL UNLESS ALL SIGNATURES COMPLETED**

Dewberry
2610 WYCLIFF ROAD
SUITE 450
RALEIGH, NC 27607
PHONE: 919.881.9939
NC COA No. F-0929

NC DEPARTMENT OF TRANSPORTATION
PAVEMENT MANAGEMENT UNIT
1593 MAIL SERVICE CENTER
RALEIGH, NC 27699-1593

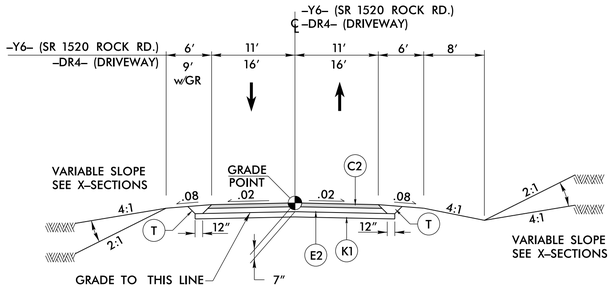


## TYPICAL SECTION NO. 9

-Y6- 10+00.00 TO -Y6- 25+92.57
-Y6- 26+12.41 TO -Y6- 33+21.90
-DR4- 12+00.00 TO -DR4- 14+17.87
NOTE - STABILIZATION NOT REQUIRED FOR DRIVEWAY -DR4-

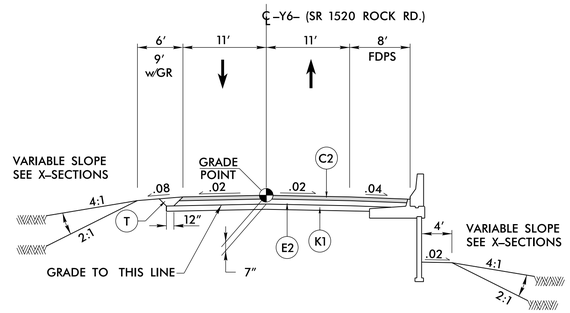


## TYPICAL SECTION NO. 9A

-Y6- 26+60.00 TO -Y6- 27+11.00 - RIGHT
-Y6- 26+25.06 TO -Y6- 26+64.31 (FDPS - RIGHT)

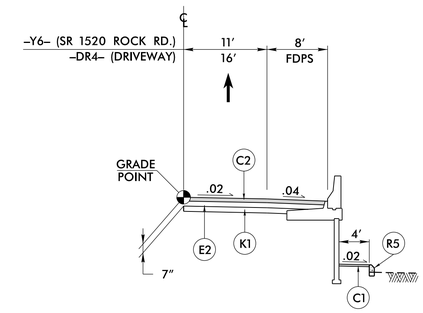


## TYPICAL SECTION NO. 9B

-Y6- 27+11.00 TO -Y6- 26+60.00 - RIGHT
-DR4 13+14.00 TO 13+97.10 - LEFT
NOTE - STABILIZATION NOT REQUIRED FOR DRIVEWAY -DR4-

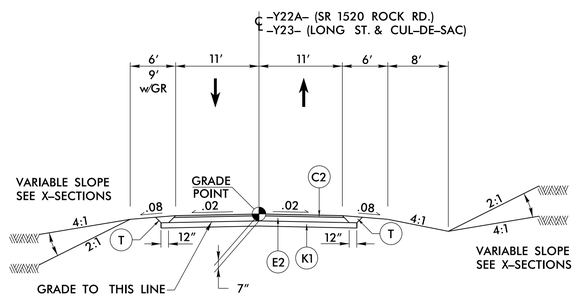


## TYPICAL SECTION NO. 10

-Y22A- 34+50.00 TO -Y22A- 40+24.15
-Y23- 36+60.00 TO -Y23- 39+33.33

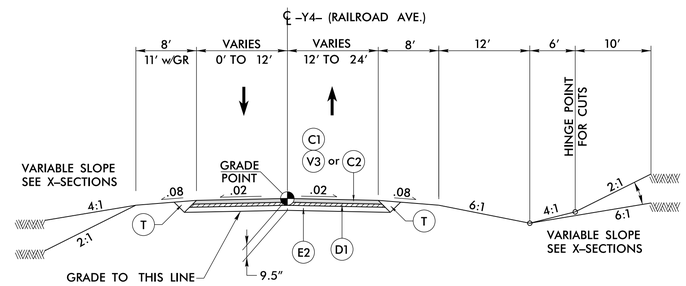


## TYPICAL SECTION NO. 11

-Y4- 17+00.00 TO -Y4- 18+50.00 - LEFT (MILL & OVERLAY)
-Y4- 18+50.00 TO -Y4- 23+45.84

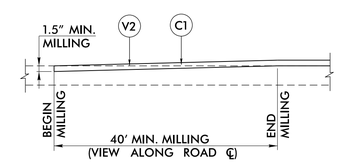


## INCIDENTAL MILLING DETAIL - V2

USE INCONJUNCTION WITH ALL -Y- LINE TIE-INS
-Y23- 36+60.00 TO -Y23- 37+00.00

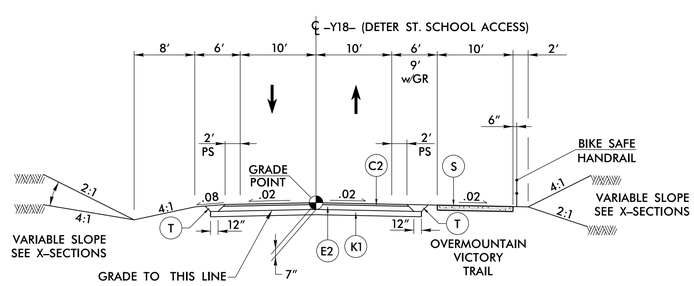


## TYPICAL SECTION NO. 12

-Y18- 14+30.00 TO -Y18- 18+11.97
-Y18- 15+50.00 TO -Y18- 16+50.00 - RIGHT w/HANDRAIL

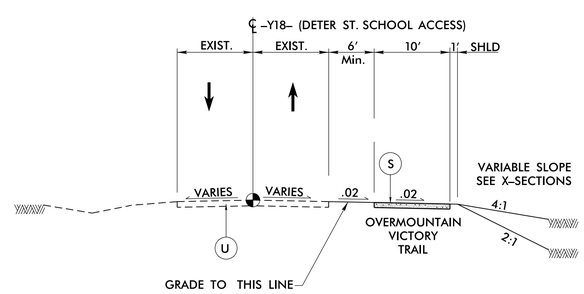


## TYPICAL SECTION NO. 12A

-Y18- 10+30.42 TO -Y18- 14+30.00

8/10/2021 3:23:43 PM
C:\pwworking\dot\brian.hill\d0327033\R2233BB_RDY_TYP_2A-5.DGN
USER: brian.hill
6/2/99