DocuSign Envelope ID: F9F48100-F30D-4BCD-8166-E31477793029

6/2/99

PAVEMENT SCHEDULE (FINAL)

ITEM	DESCRIPTION	ITEM	DESCRIPTION	ITEM	DESCRIPTION	ITEM	DESCRIPTION	ITEM	DESCRIPTION	ITEM	DESCRIPTION	ITEM	DESCRIPTION	ITEM	DESCRIPTION
A1	7" CONCRETE	C4	3" S9.5C	D3	VAR DEPTH I19.0C	E4	5" B25.0C	K1	CHEMICAL STABILIZATION: 7" SOIL-CEMENT BASE OR 8"LIME-TREATED SOIL	R1	2'-6" CONCRETE CURB & GUTTER	R5	8"x12" CONCRETE CURB	U	EXIST. PAVEMENT
C1	1.5" S9.5B	C5	VAR DEPTH S9.5C	E1	3" B25.0C	E5	VAR DEPTH B25.0C	K2	8" CLASS IV SUBGRADE STABILIZATION	R2	SHOULDER BERM GUTTER	R6	CONCRETE EXPRESSWAY GUTTER	Z	MILLED RUMBLE STRIP
C2	3" S9.5B	D1	2.5" I19.0C	E2	4" B25.0C	J1	6" ABC	N1	GEOTEXTILE FOR SOIL STABILIZATION	R3	5" CONC. ISLAND	S	4" CONC. SIDEWALK	V1	PAVEMENT MILLING
C3	VAR DEPTH S9.5B	D2	4" I19.0C	E3	4.5" B25.0C	J2	8" ABC	N2	GEOTEXTILE FOR PAVEMENT STABILIZATION	P	PRIME COAT	R4	2' MODIFIED VALLEY GUTTER	T	EARTH

ITEM	DESCRIPTION
V2	VARIABLE DEPTH PAVEMENT WEDGING

PROJECT REFERENCE NO.	SHEET NO.
R-2233BB	2A-5

ROADWAY DESIGN ENGINEER

NOT A CERTIFIED DOCUMENT AS TO THE ORIGINAL DOCUMENT BUT ONLY AS TO THE REVISIONS.

THIS DOCUMENT ORIGINALLY ISSUED AND SEALED BY :

DENNIS J. MORY

PE# 020031 ON 8/25/2021

THIS DOCUMENT IS ONLY CERTIFIED AS TO THE REVISIONS.

PAVEMENT DESIGN ENGINEER

NORTH CAROLINA PROFESSIONAL SEAL 024964 ENGINEER JOSEPH ALAN HOLLAND

DocuSigned by: 719953B195ED44E...

DOCUMENT NOT CONSIDERED FINAL UNLESS ALL SIGNATURES COMPLETED

Dewberry
2610 WYCLIFF ROAD
SUITE 410
RALEIGH, NC 27607
PHONE: 919.881.9939
NC COA No. F-0929

NC DEPARTMENT OF TRANSPORTATION
PAVEMENT MANAGEMENT UNIT
1593 MAIL SERVICE CENTER
RALEIGH, NC 27699-1593

ROADWAY DESIGN ENGINEER

NORTH CAROLINA PROFESSIONAL SEAL 038648 ENGINEER BRIAN S. LAMBETH

DocuSigned by: D5ECCF7684FC486...

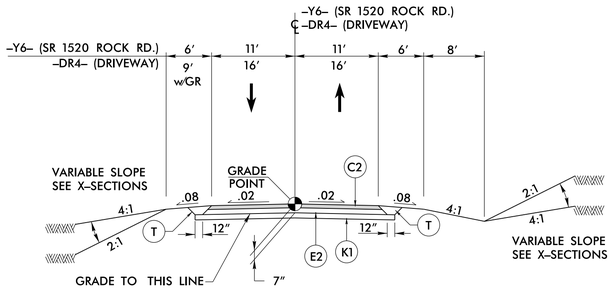

TYPICAL SECTION NO. 9

–Y6– 10+00.00 TO –Y6– 25+92.57
–Y6– 26+12.41 TO –Y6– 33+21.90
–DR4– 12+00.00 TO –DR4– 14+17.87
NOTE – STABILIZATION NOT REQUIRED FOR DRIVEWAY –DR4–

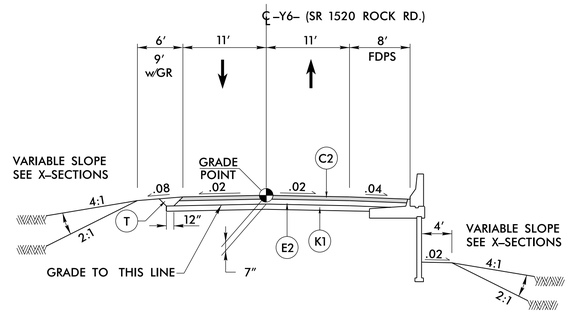

TYPICAL SECTION NO. 9A

–Y6– 26+60.00 TO –Y6– 27+11.00 – RIGHT
–Y6– 26+25.06 TO –Y6– 26+64.31 (FDPS – RIGHT)

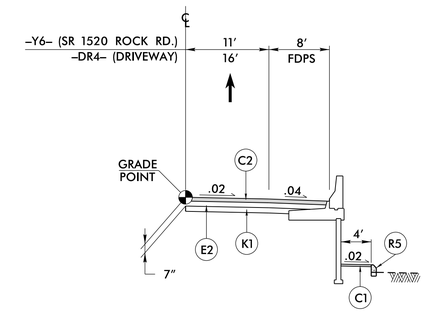

TYPICAL SECTION NO. 9B

–Y6– 27+11.00 TO –Y6– 26+60.00 – RIGHT
–DR4 13+14.00 TO 13+97.10 – LEFT
NOTE – STABILIZATION NOT REQUIRED FOR DRIVEWAY –DR4–

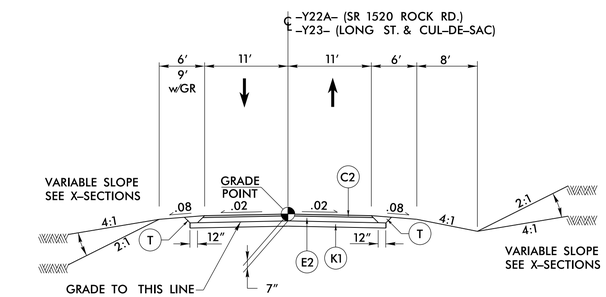

TYPICAL SECTION NO. 10

–Y22A– 34+50.00 TO –Y22A– 40+24.15
–Y23– 36+60.00 TO –Y23– 39+33.33

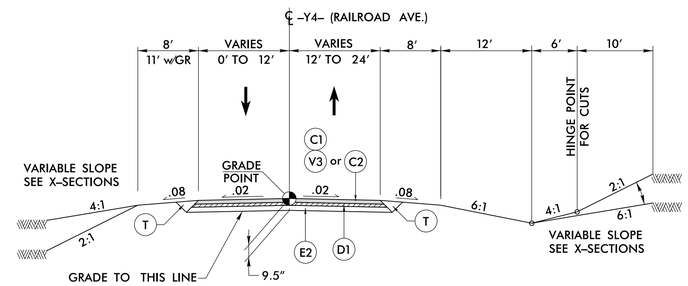

TYPICAL SECTION NO. 11

–Y4– 17+00.00 TO –Y4– 18+50.00 – LEFT (MILL & OVERLAY)
–Y4– 18+50.00 TO –Y4– 23+45.84

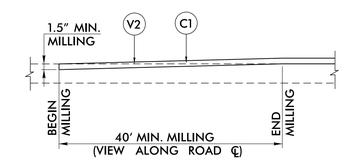

INCIDENTAL MILLING DETAIL – V2

USE INCONJUNCTION WITH ALL –Y– LINE TIE-INS
–Y23– 36+60.00 TO –Y23– 37+00.00

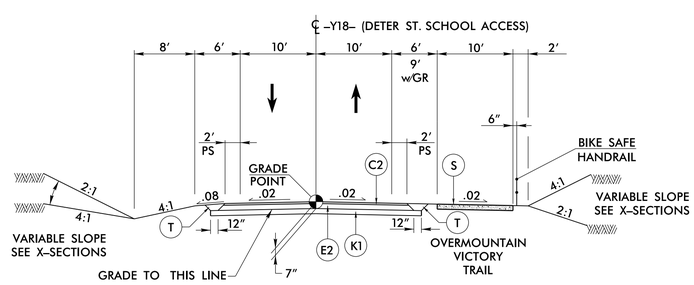

TYPICAL SECTION NO. 12

–Y18– 14+30.00 TO –Y18– 18+11.97
–Y18– 15+50.00 TO –Y18– 16+50.00 – RIGHT w/HANDRAIL

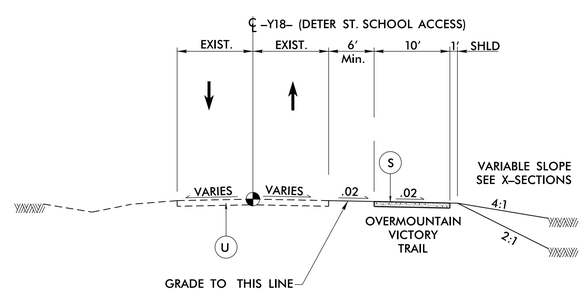

TYPICAL SECTION NO. 12A

–Y18– 10+30.42 TO –Y18– 14+30.00

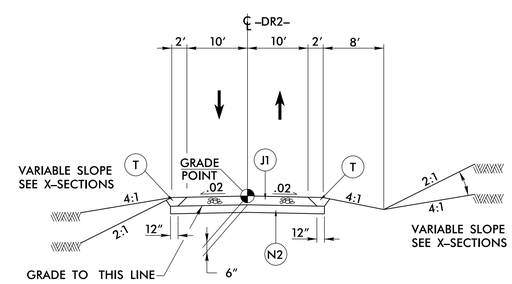

TYPICAL SECTION NO. 13

–DR2– 9+67.72 TO –DR2– 19+44.66

REVISIONS

CONSTRUCTION REV. – APRIL 29, 2022 – Removed –DR3– from typical section 13 and moved typical 13 to this sheet.

4/28/2022 2:02:41 PM
C:\Projects\2233BB_RDY_TYP_2A-5.DGN
USER: bstevens