DocuSign Envelope ID: BFBB1DB9-5082-435B-A933-0EB9525D56B2

8/17/99

REVISIONS

PROJECT TYPICAL DETAILS

PROJECT REFERENCE NO.	SHEET NO.
U-5888	UC-3A

DESIGNED BY: SS
DRAWN BY: SS
CHECKED BY: MVZ
APPROVED BY: MVZ
REVISED:

NORTH CAROLINA DEPARTMENT OF TRANSPORTATION

UTILITIES ENGINEERING SEC.
PHONE:(919)707-6690
FAX:(919)250-4151

7/18/2019
NORTH CAROLINA PROFESSIONAL ENGINEER SEAL 022321 MICHAEL V. ZACCARDO
DocuSigned by: Michael V. Zaccardo

UTILITY CONSTRUCTION PLANS ONLY

UTILITY CONSTRUCTION

DOCUMENT NOT CONSIDERED FINAL UNLESS ALL SIGNATURES COMPLETED

FINAL DESIGN
RELEASE FOR CONSTRUCTION

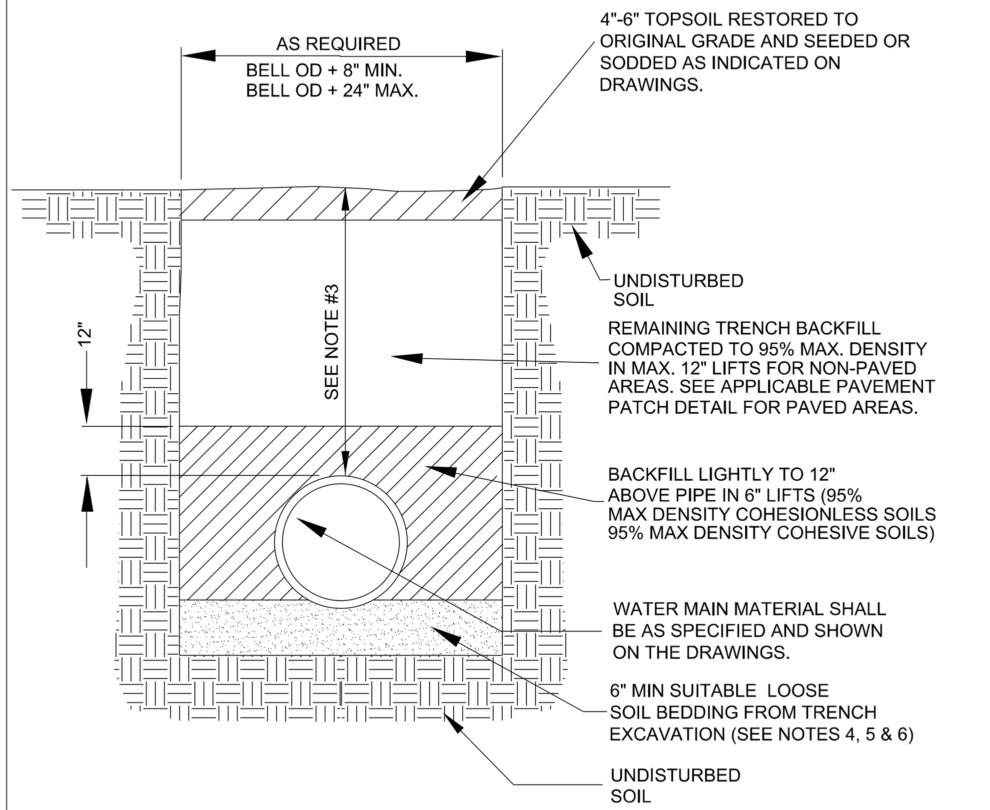

NOTES:

1. ALL EXCAVATIONS SHALL COMPLY WITH THE TERMS AND CONDITIONS OF THE CONSTRUCTION STANDARDS FOR EXCAVATIONS IN OSHA "SAFETY AND HEALTH REGULATIONS FOR CONSTRUCTION", CHAPTER XV11 OF TITLE 29, CFR, PART 1926. THE CONTRACTOR SHALL HAVE A COMPETENT PERSON ON SITE AT ALL TIMES DURING EXCAVATION AND BACKFILLING.
2. CONTRACTOR SHALL USE TRENCH BOX SHORING IN ALL OPEN CUTS IN PAVED AREAS. TRENCH WIDTH SHALL BE MAINTAINED AT THE MINIMUM PRACTICAL WIDTH.
3. SEE PLANS FOR MINIMUM COVER.
4. LOOSE SOIL OR SELECT MATERIAL IS DEFINED AS "NATIVE" SOIL EXCAVATED FROM THE TRENCH, FREE OF ROCKS, FOREIGN MATERIAL, AND FROZEN EARTH.
5. BEDDING MATERIAL SHALL EXTEND TO UNDISTURBED TRENCH WALLS AND TRENCH BOTTOM. BEDDING MATERIAL WILL NOT BE PAID FOR UNLESS SPECIFICALLY APPROVED BY THE PROJECT REPRESENTATIVE AND ONLY FOR THE AUTHORIZED QUANTITY.
6. WHERE NATIVE SOIL IS DETERMINED TO BE ADEQUATE BY THE ENGINEER, NO EXCAVATION BELOW THE BOTTOM OF PIPE IS REQUIRED.
7. BEDDING MATERIAL SHALL BE PROPERLY RODDED AND COMPACTED AROUND THE PIPE HAUNCHES.
8. TEST FOR DENSITY OF COMPACTION MAY BE MADE AT THE OPTION OF THE ENGINEER AND DEFICIENCIES SHALL BE CORRECTED BY THE CONTRACTOR AT NO ADDITIONAL COST TO THE OWNER. THE ENGINEER MAY HAVE COMPACTION TEST PERFORMED AFTER THE BACKFILL IS COMPLETE. CONTRACTOR SHALL BE REQUIRED TO EXCAVATE TO VARIOUS ELEVATIONS FOR DENSITY TESTING EXCAVATION, BACKFILL AND RECOMPACTION SHALL BE PERFORMED AT NO ADDITIONAL COSTS TO THE OWNER.

WATER MAIN BEDDING DETAIL

NTS

NOTES:

1. ALL VALVES AND HYDRANTS SHALL HAVE M.J. CONNECTIONS WITH IRON RETAINING GLAND M.J. RESTRAINT OR ANCHOR LUGS AND 3/4" DIA. STEEL ANCHOR RODS.
2. 3/4" DIA. STEEL RODS AND ALL BURIED SURFACES SHALL BE PAINTED WITH 2 COATS OF BITUMINOUS PAINT. MARRED OR SCRATCHED SURFACES SHALL BE REPAINTED. PAINT SHALL CURE PRIOR TO BACK FILLING TRENCH.
3. FIRE HYDRANTS SHALL BE PLACED AS DIRECTED BY THE ENGINEER.
4. HYDRANT BRANCH SHALL NOT BE BACK FILLED UNTIL INSPECTED AND APPROVED BY ENGINEER.
5. HYDRANT EXTENSIONS SHALL BE APPROVED BY ENGINEER.

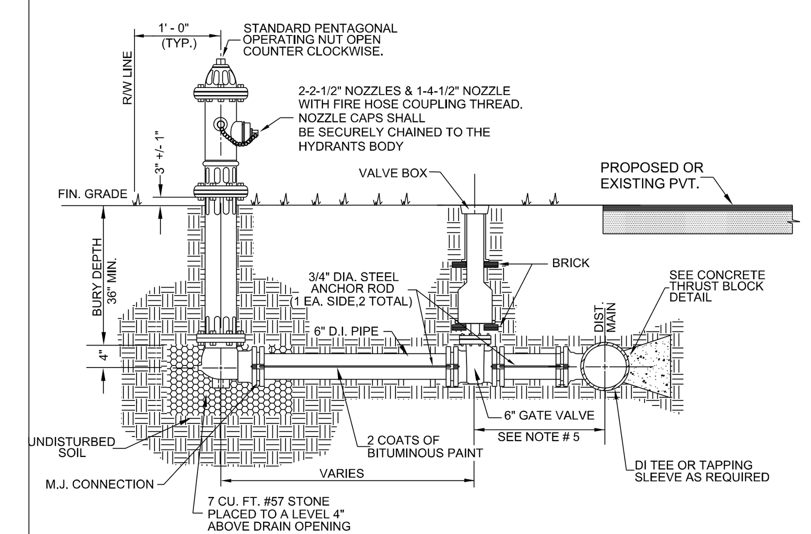

HYDRANT DETAIL

NTS

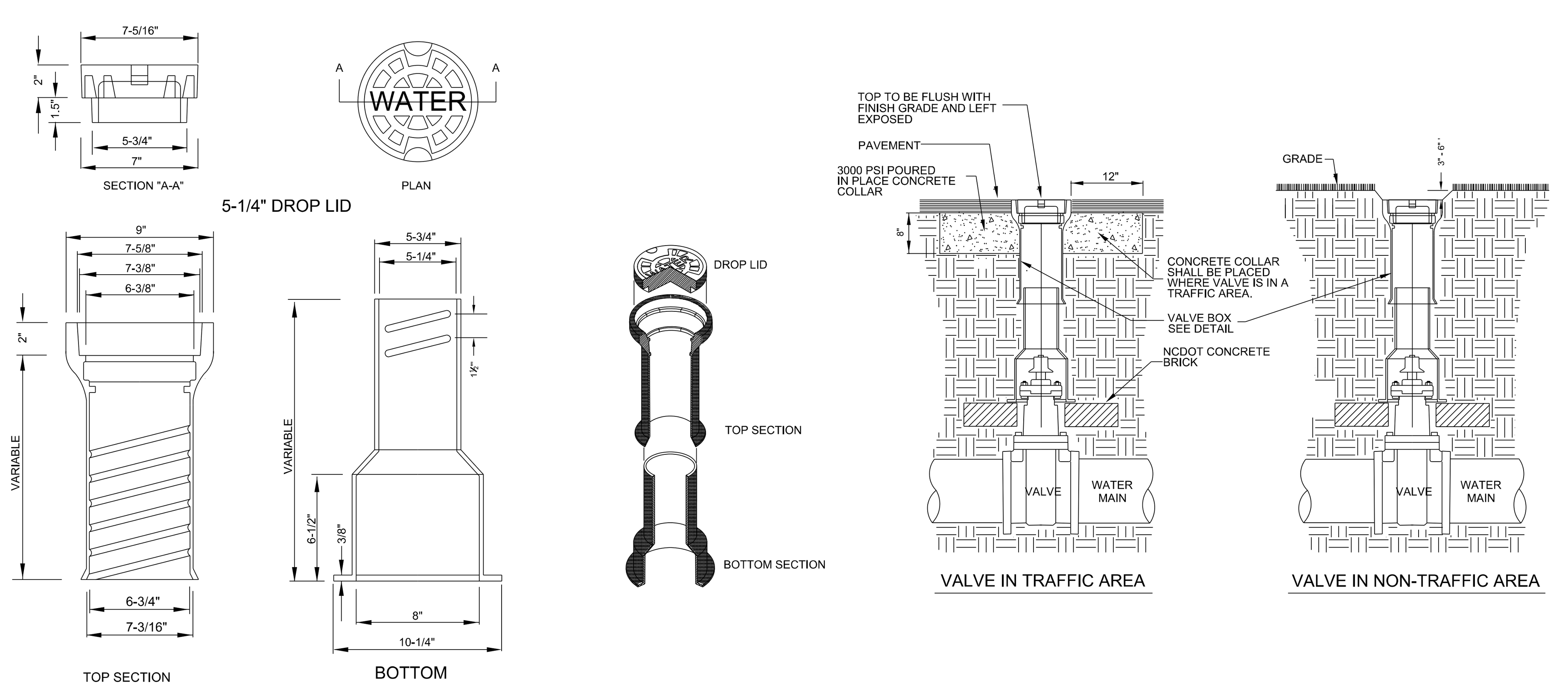

Valve Box Detail

NTS

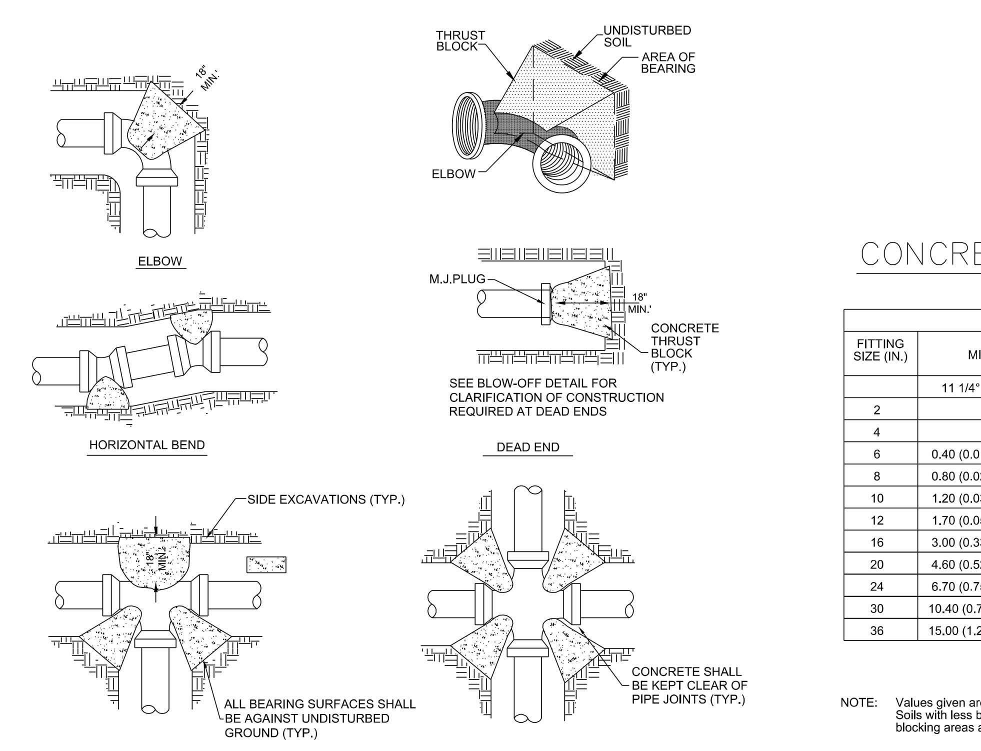

NOTES:

1.) THRUST BLOCKS SHALL BE INSTALLED ON PVC WATER DISTRIBUTION LINES 6" THRU 12" DIA. IN THE MANNER SHOWN.
2.) PIPE GREATER THAN 12 INCH DIAMETER SHALL REQUIRE RESTRAINT JOINT PIPE FOR THE PROPER LENGTH.
3.) SAC-CRETE SHALL NOT BE ALLOWED.
4.) NO CONCRETE SHALL BE PLACED ON BOLTS. WRAP JOINT FITTINGS WITH PLASTIC.
5.) CONCRETE SHALL BE A MINIMUM 3,000 psi.
6.) ALL BEARING SURFACES SHALL BE AGAINST UNDISTURBED SOIL.

CONCRETE THRUST BLOCK DETAIL

NTS

THRUST BLOCKING SCHEDULE

FITTING SIZE (IN.)	MINIMUM BLOCKING AREA AND VOLUME IN S.F. AND (C.Y.)					
	11 1/4°	22 1/2°	45°	90°	TEE	PLUG
2			0.23 (0.11)	0.38 (0.11)	0.30 (0.11)	0.30 (0.11)
4			0.83 (0.18)	1.35 (0.18)	0.98 (0.18)	0.98 (0.18)
6	0.40 (0.01)	0.80 (0.02)	1.73 (0.20)	3.00 (0.33)	2.17 (0.25)	2.17 (0.25)
8	0.80 (0.02)	1.50 (0.04)	3.08 (0.34)	5.40 (0.60)	3.83 (0.42)	3.83 (0.42)
10	1.20 (0.03)	2.30 (0.07)	4.72 (0.52)	8.40 (0.94)	5.92 (0.66)	5.92 (0.66)
12	1.70 (0.05)	3.30 (0.12)	6.82 (0.75)	12.00 (1.33)	8.48 (0.94)	8.48 (0.94)
16	3.00 (0.33)	5.90 (0.65)	11.60 (0.86)	21.30 (1.57)	15.00 (0.97)	15.00 (0.97)
20	4.60 (0.52)	9.20 (0.76)	18.00 (1.32)	33.30 (3.60)	23.30 (1.87)	23.30 (1.87)
24	6.70 (0.75)	13.20 (0.97)	26.00 (2.28)	48.00 (5.29)	33.60 (3.24)	33.60 (3.24)
30	10.40 (0.77)	20.70 (1.80)	40.60 (4.45)	75.00 (10.30)	52.50 (6.32)	52.50 (6.32)
36	15.00 (1.28)	29.80 (3.11)	58.40 (7.67)	108.0 (17.90)	75.60 (10.90)	75.60 (10.90)

NOTE: Values given are based on 150 psi water pressure and 2000 lb/sf soil bearing capacity. Soils with less bearing capacity such as muck, peat or soft clay will require greater blocking areas and volumes.

The thrust blocking shown above is based on the use of mechanical joint as shown on plans.

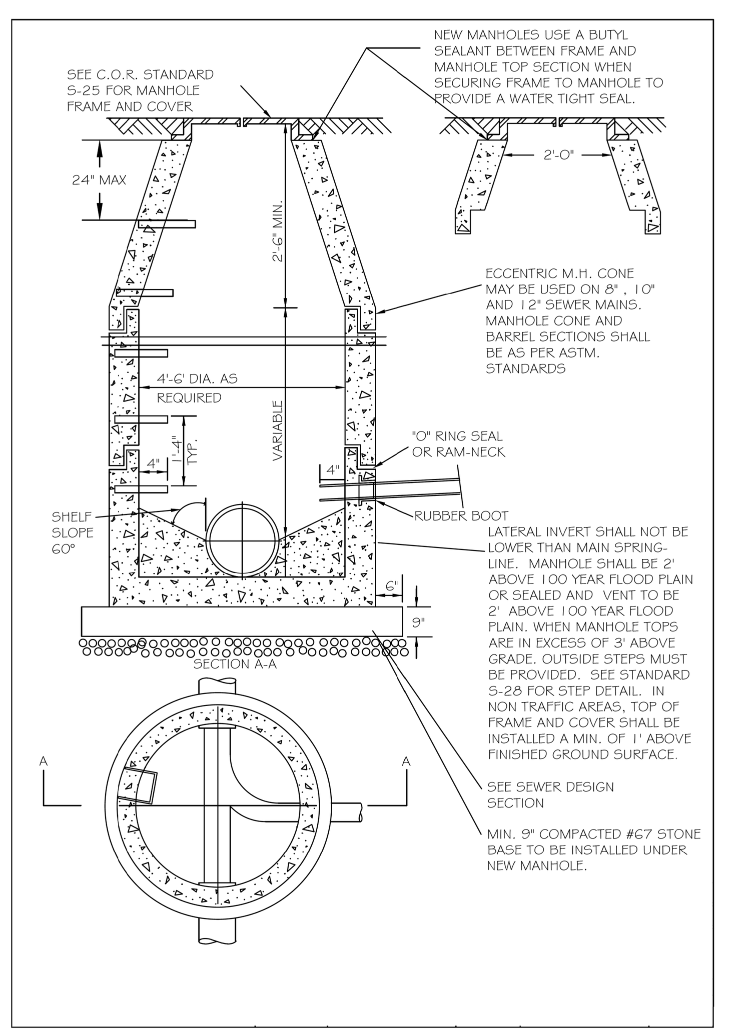

STANDARD PRECAST SANITARY SEWER MANHOLE

NTS

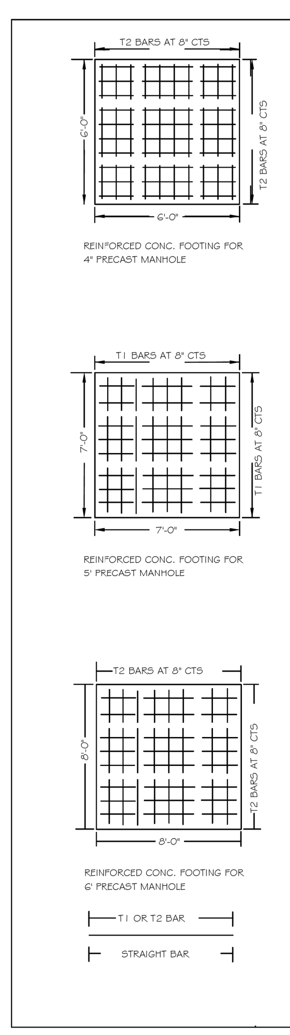

BILL OF MATERIAL FOR 4' MANHOLE

BAR	SIZE	LENGTH	NO.	WT. LBS.
T2	#5	5'-6"	18	103
CL. "A" CONCRETE TOTAL CU. YDS.				,000

BILL OF MATERIAL FOR 4' MANHOLE

BAR	SIZE	LENGTH	NO.	WT. LBS.
T1	#5	6'-6"	20	136
CL. "A" CONCRETE TOTAL CU. YDS.				.361

BILL OF MATERIAL FOR 4' MANHOLE

BAR	SIZE	LENGTH	NO.	WT. LBS.
T2	#5	7'-6"	24	165
CL. "A" CONCRETE TOTAL CU. YDS.				.778

* ALL BASES ARE MINIMUM 9" THICK

EXTENDED BASE OR CAST-IN-PLACE REINFORCED CONCRETE BASE

NTS

COVER 120 LBS. MINIMUM

MANHOLE FRAME AND COVER

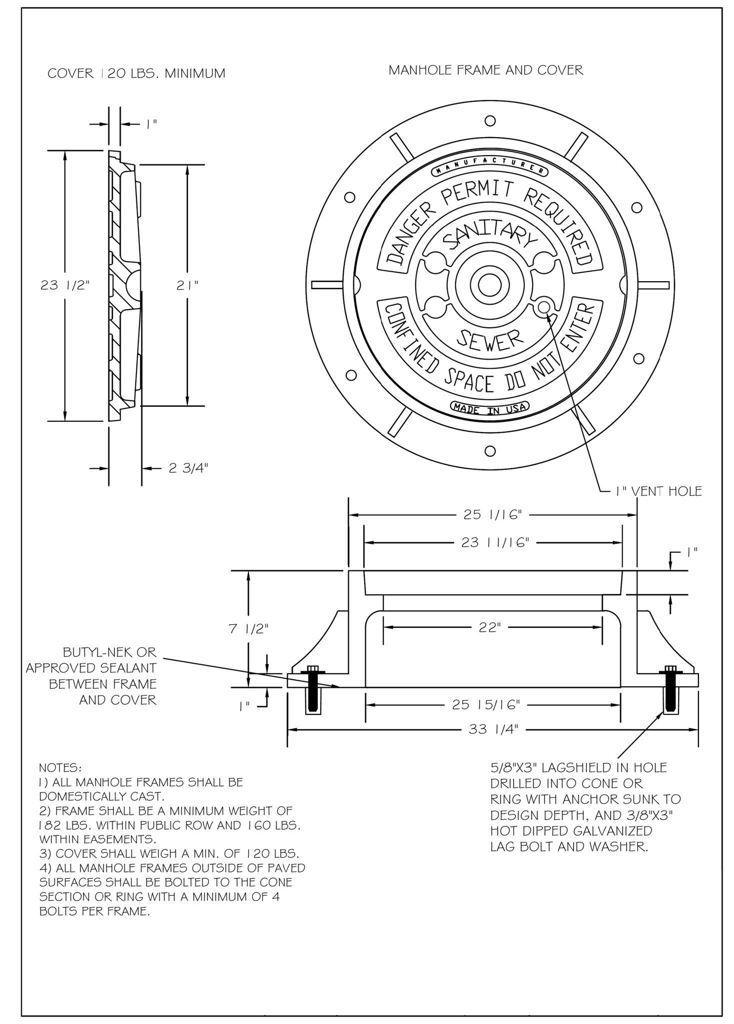

NOTES:
1) ALL MANHOLE FRAMES SHALL BE DOMESTICALLY CAST.
2) FRAME SHALL BE A MINIMUM WEIGHT OF 182 LBS. WITHIN PUBLIC ROW AND 160 LBS. WITHIN EASEMENTS.
3) COVER SHALL WEIGH A MIN. OF 120 LBS.
4) ALL MANHOLE FRAMES OUTSIDE OF PAVED SURFACES SHALL BE BOLTED TO THE CONE SECTION OR RING WITH A MINIMUM OF 4 BOLTS PER FRAME.

STANDARD MANHOLE COVER

NTS

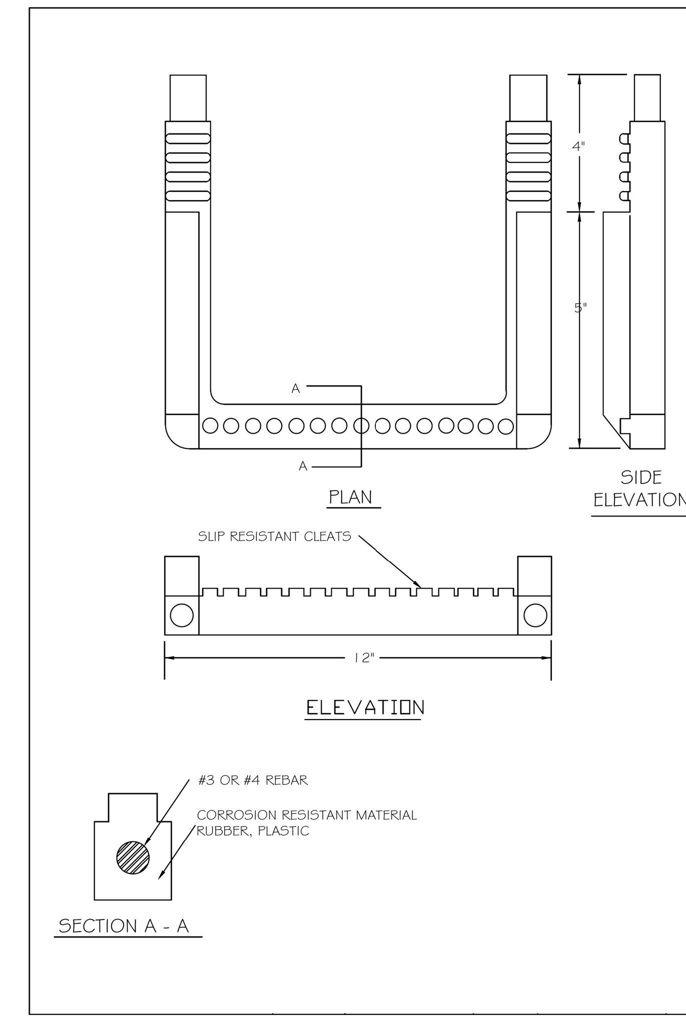

STANDARD SLIP RESISTANT MANHOLE STEP DETAIL

NTS

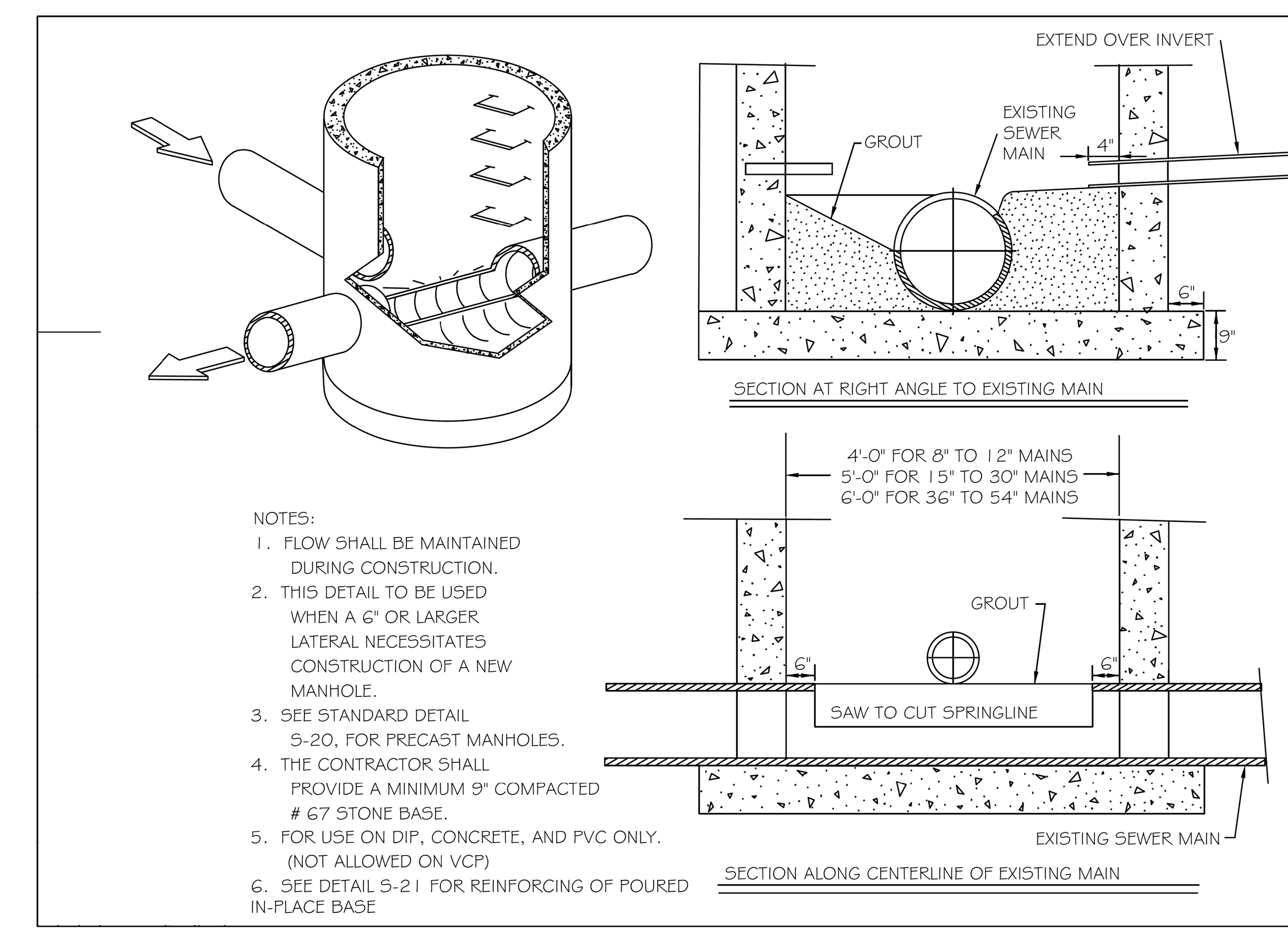

NOTES:
1. FLOW SHALL BE MAINTAINED DURING CONSTRUCTION.
2. THIS DETAIL TO BE USED WHEN A 6" OR LARGER LATERAL NECESSITATES CONSTRUCTION OF A NEW MANHOLE.
3. SEE STANDARD DETAIL S-20, FOR PRECAST MANHOLES.
4. THE CONTRACTOR SHALL PROVIDE A MINIMUM 9" COMPACTED # 67 STONE BASE.
5. FOR USE ON DIP, CONCRETE, AND PVC ONLY. (NOT ALLOWED ON VCP)
6. SEE DETAIL S-21 FOR REINFORCING OF POURED IN-PLACE BASE

STANDARD MANHOLE INSTALLATION OVER EXISTING SEWER MAIN

NTS

7/17/2019
...\u5888_ut_rdy3A_UC3A_psh.dgn
USER:skennedy