DocuSign Envelope ID: E4152F6C-95BE-496F-95DA-631ADAF3FAEE

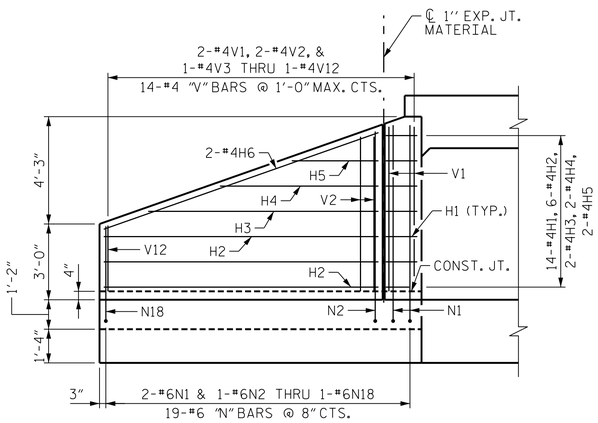

ELEVATION-W1

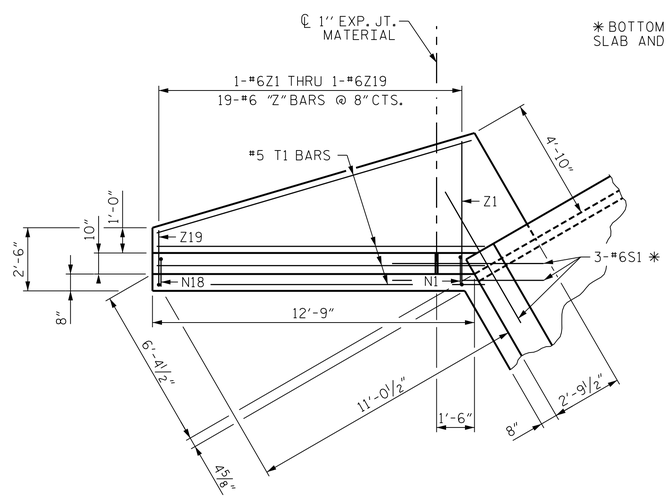

✱ BOTTOM OF FLOOR SLAB AND FOOTING

PLAN-W1

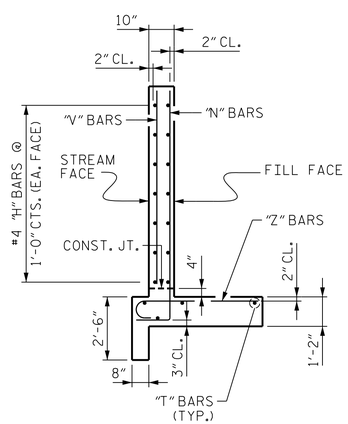

TYPICAL WING SECTION

REINFORCING BAR SCHEDULE

BAR	NO.	SIZE	TYPE	DIM "A"	LENGTH	WEIGHT	BAR	NO.	SIZE	TYPE	DIM "A"	LENGTH	WEIGHT
H1	56	# 4	4	-	3' - 3"	122	V1	8	# 4	STR	-	6' - 6"	35
H2	24	# 4	STR	-	10' - 10"	174	V2	8	# 4	STR	-	6' - 1"	33
H3	8	# 4	STR	-	9' - 1"	49	V3	4	# 4	STR	-	5' - 9"	15
H4	8	# 4	STR	-	6' - 3"	33	V4	4	# 4	STR	-	5' - 5"	14
H5	8	# 4	STR	-	3' - 5"	18	V5	4	# 4	STR	-	5' - 1"	14
H6	8	# 4	STR	-	11' - 6"	61	V6	4	# 4	STR	-	4' - 8"	12
							V7	4	# 4	STR	-	4' - 4"	12
N1	8	# 6	2	7' - 2½"	8' - 8"	104	V8	4	# 4	STR	-	4' - 0"	11
N2	4	# 6	2	6' - 11½"	8' - 5"	51	V9	4	# 4	STR	-	3' - 8"	10
N3	4	# 6	2	6' - 8½"	8' - 2"	49	V10	4	# 4	STR	-	3' - 3"	9
N4	4	# 6	2	6' - 6½"	8' - 0"	48	V11	4	# 4	STR	-	2' - 11"	8
N5	4	# 6	2	6' - 3½"	7' - 9"	47	V12	4	# 4	STR	-	2' - 7"	7
N6	4	# 6	2	6' - 0½"	7' - 6"	45							
N7	4	# 6	2	5' - 9½"	7' - 3"	44	Z1	4	# 6	3	5' - 8"	6' - 4"	38
N8	4	# 6	2	5' - 6½"	7' - 0"	42	Z2	4	# 6	3	5' - 6"	6' - 2"	37
N9	4	# 6	2	5' - 3½"	6' - 9"	41	Z3	4	# 6	3	5' - 3"	5' - 11"	36
N10	4	# 6	2	5' - 1½"	6' - 7"	40	Z4	4	# 6	3	5' - 1"	5' - 9"	35
N11	4	# 6	2	4' - 10½"	6' - 4"	38	Z5	4	# 6	3	4' - 10"	5' - 6"	33
N12	4	# 6	2	4' - 7½"	6' - 1"	37	Z6	4	# 6	3	4' - 8"	5' - 4"	32
N13	4	# 6	2	4' - 4½"	5' - 10"	35	Z7	4	# 6	3	4' - 6"	5' - 2"	31
N14	4	# 6	2	4' - 1½"	5' - 7"	34	Z8	4	# 6	3	4' - 3"	4' - 11"	30
N15	4	# 6	2	3' - 11½"	5' - 5"	33	Z9	4	# 6	3	4' - 1"	4' - 9"	29
N16	4	# 6	2	3' - 8½"	5' - 2"	31	Z10	4	# 6	3	3' - 11"	4' - 7"	28
N17	4	# 6	2	3' - 5½"	4' - 11"	30	Z11	4	# 6	3	3' - 8"	4' - 4"	26
N18	4	# 6	2	3' - 2½"	4' - 8"	28	Z12	4	# 6	3	3' - 6"	4' - 2"	25
							Z13	4	# 6	3	3' - 4"	4' - 0"	24
S1	12	# 6	STR	-	6' - 0"	108	Z14	4	# 6	3	3' - 1"	3' - 9"	23
							Z15	4	# 6	3	2' - 11"	3' - 7"	22
T1	16	# 5	STR	-	13' - 0"	217	Z16	4	# 6	3	2' - 9"	3' - 5"	21
							Z17	4	# 6	3	2' - 6"	3' - 2"	19
							Z18	4	# 6	3	2' - 4"	3' - 0"	18
							Z19	4	# 6	3	2' - 2"	2' - 10"	17

QUANTITIES

REINFORCING STEEL FOR 4 WINGS	2263 LBS.
CLASS A CONCRETE	
4 WINGS	20.8 C.Y.
2 HEADWALLS	0.9 C.Y.
2 END CURTAIN WALLS	0.9 C.Y.
TOTAL	22.6 C.Y.

BAR TYPES

ALL BAR DIMENSIONS ARE OUT-TO-OUT

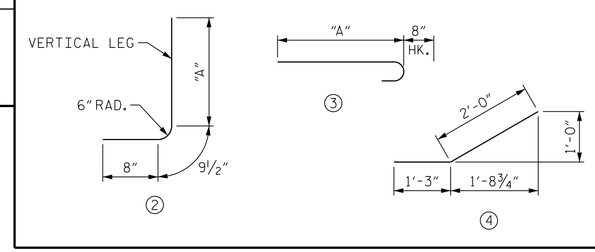

PROJECT NO. U-2579AB

FORSYTH COUNTY

STATION: 30+13.47 -Y15REV-

SHEET 5 OF 6

STATE OF NORTH CAROLINA
DEPARTMENT OF TRANSPORTATION
RALEIGH

WINGS FOR CONCRETE BOX CULVERT 90° SKEW

NORTH CAROLINA PROFESSIONAL SEAL 29589 ENGINEER DOMENIC A. COLETTI

10/11/2021

HDR Engineering, Inc. of the Carolinas
555 Fayetteville St., Suite 900 Raleigh, N.C. 27601
N.C.B.E.L.S. License Number: F-0116

DOCUMENT NOT CONSIDERED FINAL UNLESS ALL SIGNATURES COMPLETED

REVISIONS						
NO.	BY:	DATE:	NO.	BY:	DATE:	SHEET NO. C4-5
1			3			TOTAL SHEETS 6
2			4			

DES BY: T. MCALEENAN	DATE : 11/19	DWG BY: T. MCALEENAN	DATE : 11/19
DES CHK: R. TURNAGE	DATE : 11/19	CHK BY: R. TURNAGE	DATE : 11/19

PLOT DRIVER: NCDOT_pdf_color_eng_50.plt USER: PPETERSO DATE: 10/1/2021 FILE: ...\WINGWALL 1 VIEWS PENTABLE: NCDOT STRUCTURES DEFAULT PEN.tbl TIME: 8:14:34 AM