DocuSign Envelope ID: AA858205-F84D-41FB-B68B-A2947DD06B7F

NOTES

FOR SECTIONS C-C AND D-D, SEE "SUBSTRUCTURE BENT 5 BENT CAP DETAILS", SHEET 4 OF 5.

FOR ADDITIONAL NOTES, SEE SHEET 1 OF 5.

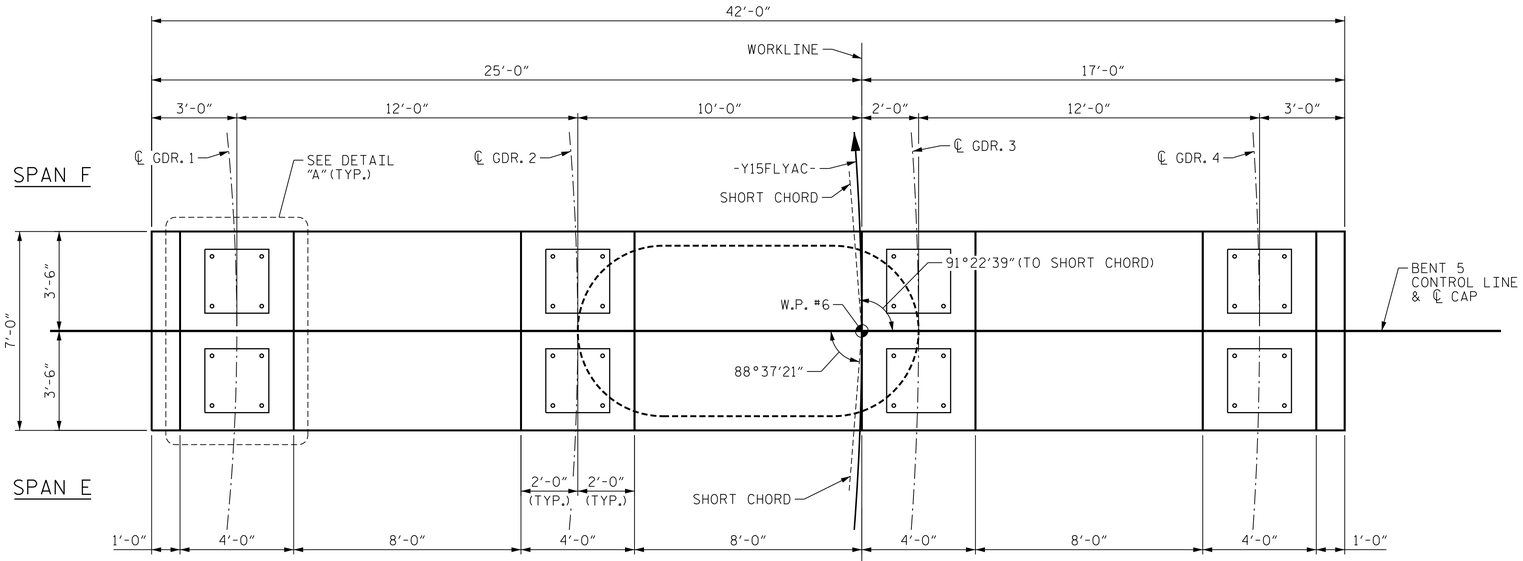

PLAN OF CAP

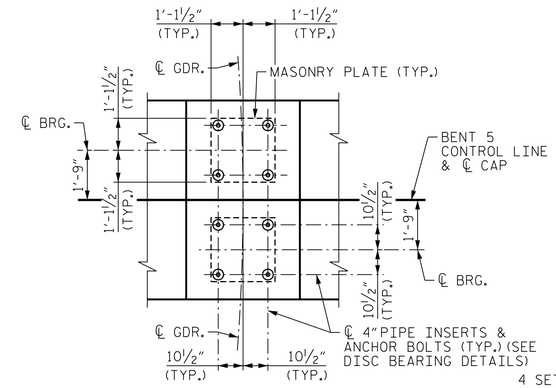

DETAIL "A"

(TYP. @ EA. BEARING)

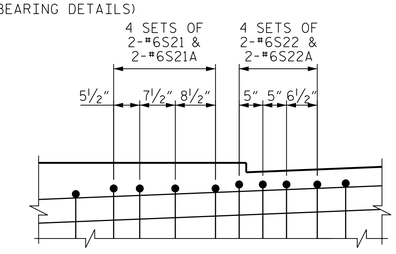

DETAIL "C"

DETAIL SHOWN AT LEFT SIDE OF CAP (SPACING OF STIRRUPS MIRRORED AT RIGHT SIDE OF CAP WITH BARS #6S23/#6S23A AND #6S24/#6S24A AS SHOWN ON THE ELEVATION)

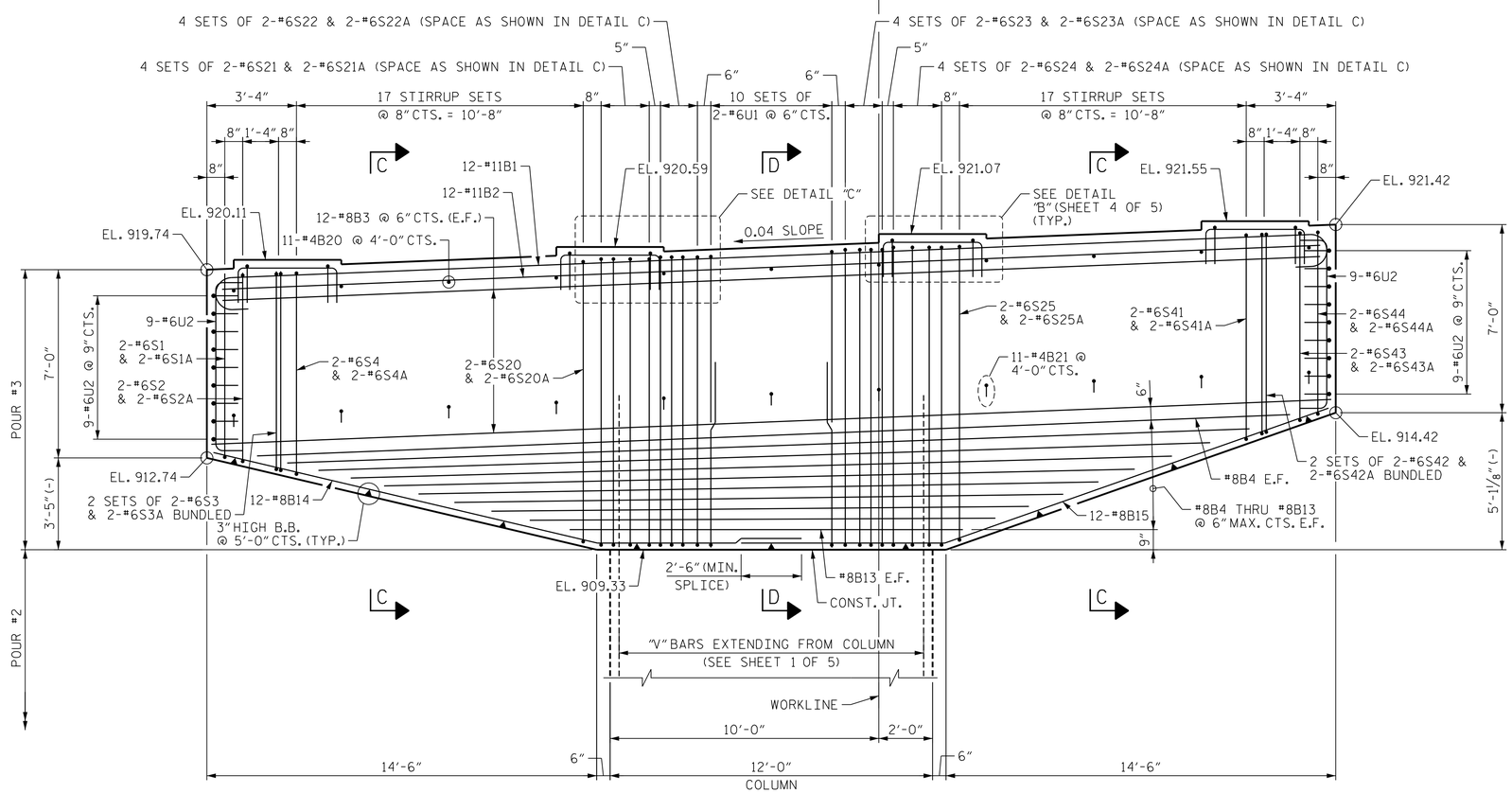

ELEVATION OF CAP

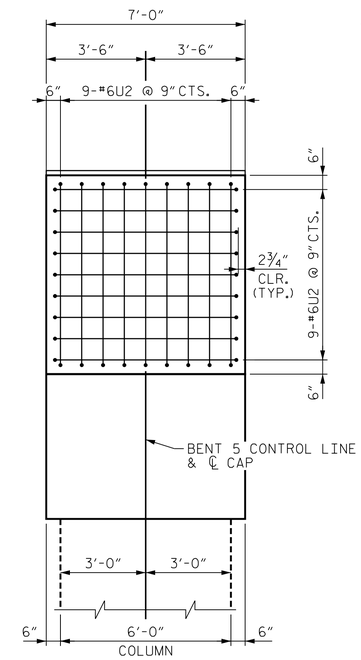

END VIEW

PROJECT NO. U-2579AB

FORSYTH COUNTY

STATION: 60+66.06 -Y15FLYAC-

SHEET 3 OF 5

STATE OF NORTH CAROLINA
DEPARTMENT OF TRANSPORTATION
RALEIGH

SUBSTRUCTURE BENT 5 BENT CAP PLAN AND ELEVATION

NORTH CAROLINA PROFESSIONAL SEAL 29589 ENGINEER DOMENIC A. COLETTI

10/15/2021

HDR Engineering, Inc. of the Carolinas
555 Fayetteville St., Suite 900 Raleigh, N.C. 27601
N.C.B.E.L.S. License Number: F-0116

DOCUMENT NOT CONSIDERED FINAL UNLESS ALL SIGNATURES COMPLETED

REVISIONS							SHEET NO.
NO.	BY:	DATE:	NO.	BY:	DATE:		S04-115
1	--	--	3	--	--		TOTAL SHEETS
2	--	--	4	--	--		144

DES BY: K. OLIVER	DATE: 10/19	DWG BY: B. PETERSON	DATE: 10/19
DES CHK: M. WERNER	DATE: 10/19	CHK BY: K. OLIVER	DATE: 11/19

PLOT DRIVER: NCDOT_pdf_color_eng_50.plt
USER: PPETERSO
FILE: ...\SUBSTR
PENTABLE: NCDOT STRUCTURES DEFAULT PEN.tbl
DATE: 10/14/2021
TIME: 4:09:04 PM