DocuSign Envelope ID: AA858205-F84D-41FB-B68B-A2947DD06B7F

BAR TYPES

ALL BAR DIMENSIONS ARE OUT TO OUT

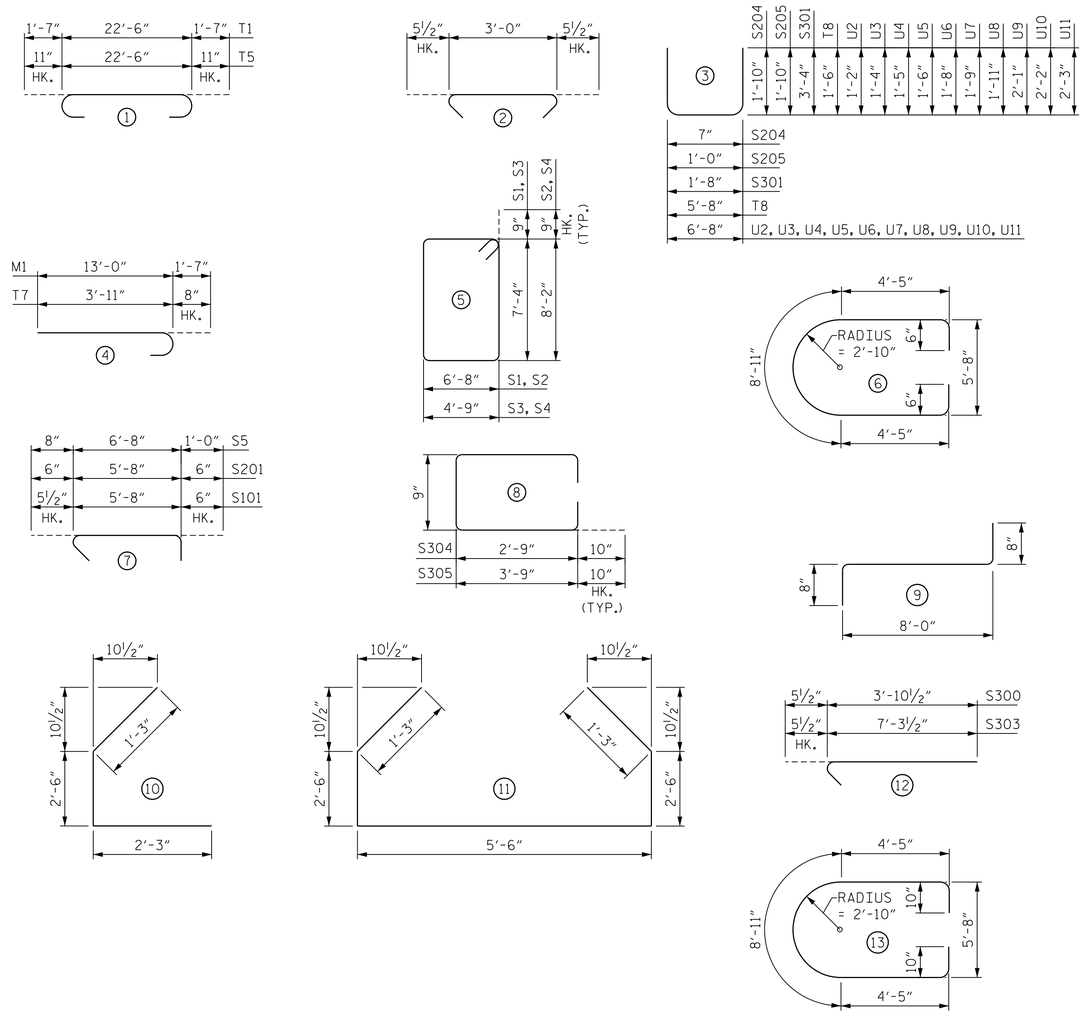

BILL OF MATERIAL - BENT 3

BAR	NO.	SIZE	TYPE	LENGTH	WEIGHT
B1	38	#10	STR.	37'-8"	6,159
B2	26	#5	STR.	6'-8"	181
B100	6	#5	STR.	8'-6"	53
D1	20	#18	STR.	14'-7"	3,967
M1	60	#11	4	14'-7"	4,649
S1	18	#6	5	29'-6"	798
S2	57	#6	5	31'-2"	2,668
S3	36	#6	5	25'-8"	1,388
S4	114	#6	5	27'-4"	4,680
S5	300	#6	7	8'-4"	3,755
S100	76	#5	6	18'-9"	1,486
S101	114	#5	7	6'-8"	793
S200	17	#5	13	19'-5"	344
S201	16	#5	7	6'-8"	111
S202	4	#5	10	6'-0"	25
S203	8	#5	11	13'-0"	108
S204	7	#5	3	4'-3"	31
S205	7	#5	3	4'-8"	34
S300	36	#5	12	4'-4"	163
S301	16	#5	3	8'-4"	139
S302	12	#5	2	3'-11"	49
S303	24	#5	12	7'-9"	194
S304	24	#5	8	7'-11"	198
S305	24	#5	8	9'-11"	248

BAR	NO.	SIZE	TYPE	LENGTH	WEIGHT
T1	68	#11	1	25'-8"	9,273
T3	40	#5	STR.	22'-6"	939
T5	48	#8	1	24'-4"	3,119
Δ T7	16	#6	4	4'-7"	110
T8	180	#5	3	8'-8"	1,627
U1	16	#4	9	9'-4"	100
U2	2	#4	3	9'-0"	12
U3	2	#4	3	9'-4"	12
U4	2	#4	3	9'-6"	13
U5	2	#4	3	9'-8"	13
U6	2	#4	3	10'-0"	13
U7	2	#4	3	10'-2"	14
U8	2	#4	3	10'-6"	14
U9	2	#4	3	10'-10"	14
U10	2	#4	3	11'-0"	15
U11	2	#4	3	11'-2"	15
V1	60	#11	STR.	20'-9"	6,615

SUMMARY OF QUANTITIES - BENT 3

REINFORCING STEEL	54,139 LBS.
CLASS AA CONCRETE	
POUR #1 - FOOTING	137.2 C.Y.
POUR #2 - LOWER COLUMN	27.4 C.Y.
POUR #5 - ENDS OF INTEGRAL CAP	8.4 C.Y.
TOTAL	173.0 C.Y.
6000 PSI CONCRETE	
POUR #3 - UPPER COLUMN	21.1 C.Y.
POUR #4 - INTEGRAL CAP, HINGE & KEY	74.1 C.Y.
TOTAL	95.2 C.Y.
POST-TENSIONING ENCASEMENT	
EPOXY GROUT	LUMP SUM
HP 14x73 STEEL PILES	
NO.	36
LF	2,160
PILE DRIVING EQUIPMENT SETUP FOR HP 14X73 STEEL PILES EA.	36

Δ = ASTM A706 WELDABLE REINFORCING STEEL

PROJECT NO. U-2579AB

FORSYTH COUNTY

STATION: 60+66.06 -Y15FLYAC-

SHEET 4 OF 4

STATE OF NORTH CAROLINA
DEPARTMENT OF TRANSPORTATION
RALEIGH

SUBSTRUCTURE BENT 3 BILL OF MATERIALS

NORTH CAROLINA PROFESSIONAL SEAL 29589 ENGINEER DOMENIC A. COLETTI

10/15/2021

REVISIONS						SHEET NO. S04-104
NO.	BY:	DATE:	NO.	BY:	DATE:	TOTAL SHEETS 144
1	--	--	3	--	--	
2	--	--	4	--	--	

HDR Engineering, Inc. of the Carolinas
555 Fayetteville St., Suite 900 Raleigh, N.C. 27601
N.C.B.E.L.S. License Number: F-0116

DOCUMENT NOT CONSIDERED FINAL UNLESS ALL SIGNATURES COMPLETED

DES BY: T. ANDREWS	DATE: 11/19	DWG BY: B. PETERSON	DATE: 11/19
DES CHK: D. COLETTI	DATE: 11/19	CHK BY: D. COLETTI	DATE: 11/19

PLOT DRIVER: NCDOT_pdf_color_eng_50.plt
USER: PPETERSO DATE: 10/14/2021
FILE: ...\SUBSTR
PENTABLE: NCDOT STRUCTURES DEFAULT PEN.tbl
TIME: 4:07:12 PM