DocuSign Envelope ID: 228B5C22-79CA-4B09-870D-1104FCE02AF4

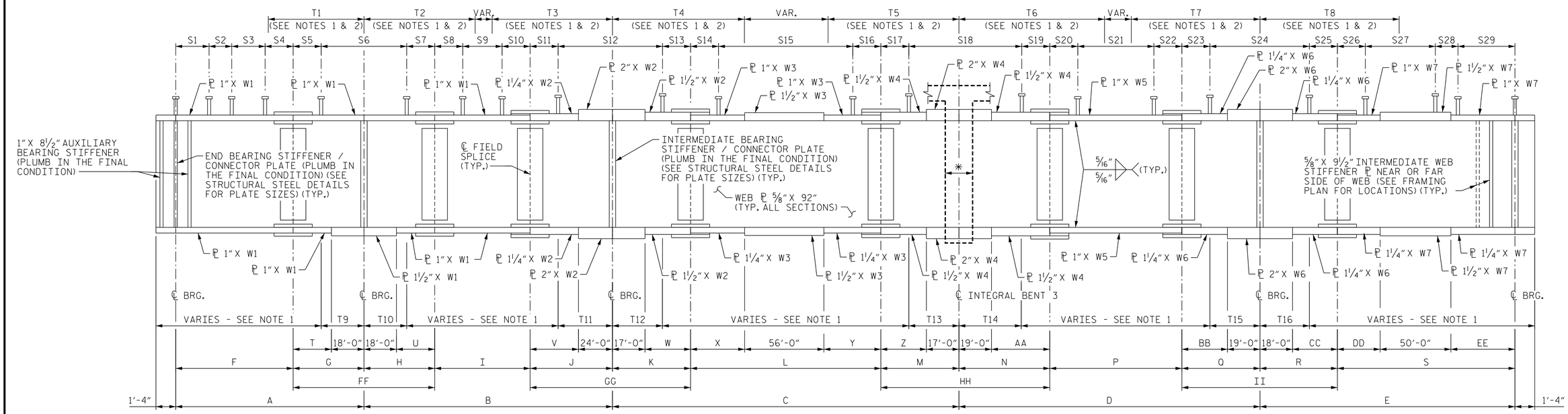

ELEVATION

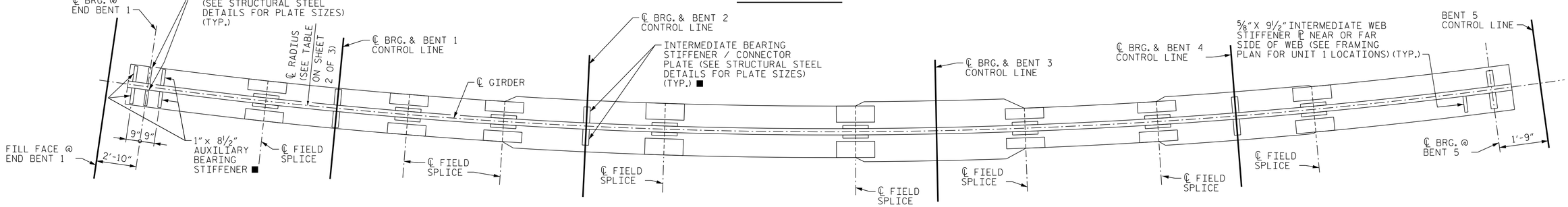

PLAN OF BOTTOM FLANGE

■ = SEE TABLE OF BEARING STIFFENERS ON "STRUCTURAL STEEL DETAILS" SHEET 1 OF 2.

✳ = INTEGRAL BENT CAP - SEE SHEET 3 OF 3 FOR STEEL FABRICATION DETAILS AT BENT 3

NOTES

1. CHARPY V-NOTCH TESTS ARE REQUIRED FOR ALL TOP OR BOTTOM FLANGE PLATES WHICH FALL WITHIN THESE LIMITS. ALL WEB PLATES AND ALL SPLICE PLATES. IF A PERMITTED SHOP FLANGE SPLICE IS NOT USED, CHARPY V-NOTCH TESTS WILL BE REQUIRED FOR THE ENTIRE FLANGE PLATE. FOR CHARPY V-NOTCH TESTS, SEE ARTICLE 1072-7 OF THE STANDARD SPECIFICATIONS.
2. NO WELDING OF FORMS OR FALSEWORK TO THE TOP FLANGE WILL BE PERMITTED IN THIS REGION.
3. DIMENSIONS ARE HORIZONTAL ARC DIMENSIONS ALONG THE ℄ OF GIRDER. NO CORRECTIONS HAVE BEEN MADE TO ADJUST FOR THE DISTANCE ALONG THE GRADE.
4. FOR SHEAR CONNECTOR TRANSVERSE SPACING, SEE "STRUCTURAL STEEL DETAILS" SHEET.
5. FOR CHARPY V-NOTCH TEST, SEE SPECIAL PROVISIONS.
6. FOR DIMENSIONS, SEE SHEET 2 OF 3.
7. SEE SHEET "FRAMING PLAN - UNIT 1" FOR FIELD SPLICE TYPES.

PROJECT NO. U-2579AB

FORSYTH COUNTY

STATION: 60+66.06 -Y15FLYAC-

SHEET 1 OF 3

STATE OF NORTH CAROLINA
DEPARTMENT OF TRANSPORTATION
RALEIGH

SUPERSTRUCTURE GIRDER DETAILS UNIT 1

NORTH CAROLINA PROFESSIONAL SEAL 29589 ENGINEER DOMENIC A. COLETTI

10/15/2021

HDR Engineering, Inc. of the Carolinas
555 Fayetteville St., Suite 900 Raleigh, N.C. 27601
N.C.B.E.L.S. License Number: F-0116

DOCUMENT NOT CONSIDERED FINAL UNLESS ALL SIGNATURES COMPLETED

REVISIONS							SHEET NO. S04-034
NO.	BY:	DATE:	NO.	BY:	DATE:		TOTAL SHEETS 144
1	--	--	3	--	--		
2	--	--	4	--	--		

DES BY: G. SCHMITZ	DATE: 07/19	DWG BY: B. PETERSON	DATE: 07/19
DES CHK: D. COLETTI	DATE: 08/19	CHK BY: G. SCHMITZ	DATE: 10/19

PLOT DRIVER: NCDOT_pdf_color_eng_50.plt USER: PPETERSO DATE: 10/14/2021 FILE: ...\SUPERS
PENTABLE: NCDOT STRUCTURES DEFAULT PEN.tbl TIME: 4:00:45 PM