DocuSign Envelope ID: FF6D8BE7-FEBC-40BC-8CDE-240E617D4E29

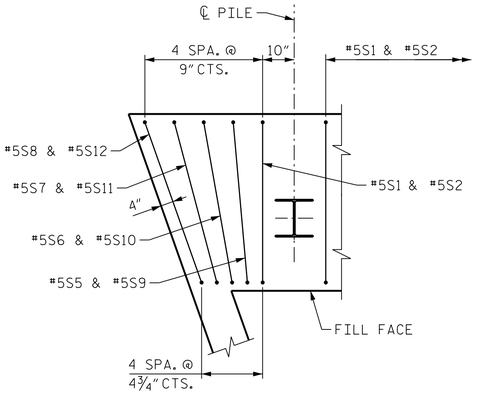

DETAIL "X"

(SHOWING STIRRUPS ONLY)

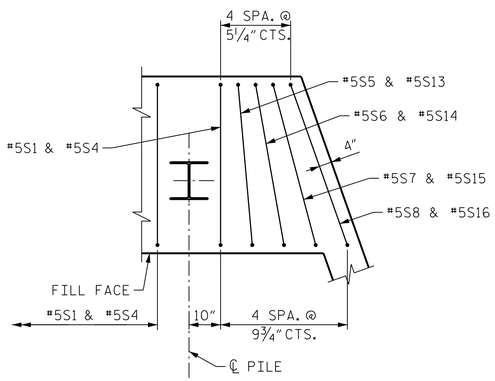

DETAIL "Y"

(SHOWING STIRRUPS ONLY)

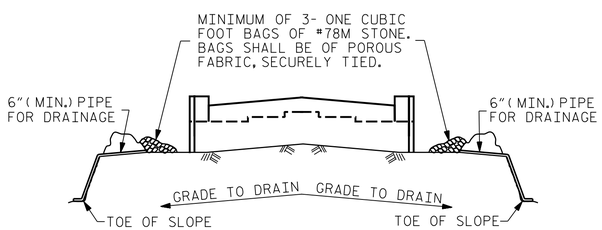

BAGGED STONE AND PIPE SHALL BE PLACED IMMEDIATELY AFTER COMPLETION OF END BENT EXCAVATION. PIPE MAY BE EITHER CONCRETE, CORRUGATED STEEL, CORRUGATED ALUMINUM ALLOY, OR CORRUGATED PLASTIC. PERFORATED PIPE WILL NOT BE ALLOWED.

BAGGED STONE SHALL REMAIN IN PLACE UNTIL THE ENGINEER DIRECTS THAT IT BE REMOVED. THE CONTRACTOR SHALL REMOVE AND DISPOSE OF SILT ACCUMULATIONS AT BAGGED STONE WHEN SO DIRECTED BY THE ENGINEER. BAGS SHALL BE REMOVED AND REPLACED WHENEVER THE ENGINEER DETERMINES THAT THEY HAVE DETERIORATED AND LOST THEIR EFFECTIVENESS.

NO SEPARATE PAYMENT WILL BE MADE FOR THIS WORK AND THE ENTIRE COST OF THIS WORK SHALL BE INCLUEDED IN THE UNIT CONTRACT PRCE BID FOR THE SEVERAL PAY ITEMS.

TEMPORARY DRAINAGE AT END BENT

BAR TYPES

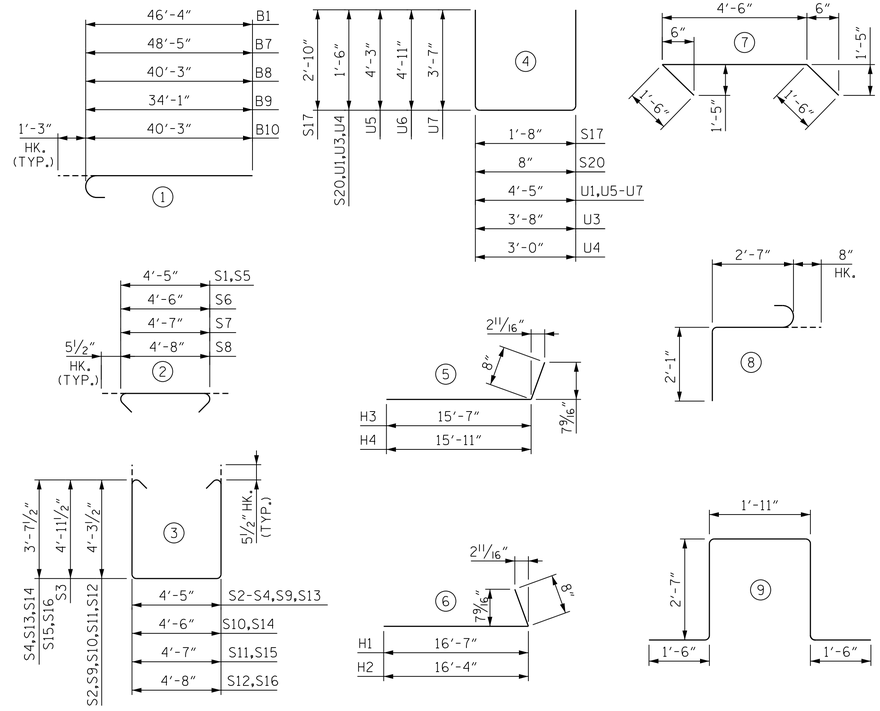

ALL BAR DIMENSIONS ARE OUT TO OUT

BILL OF MATERIAL

END BENT 1

BAR	NO.	SIZE	TYPE	LENGTH	WEIGHT
B1	12	#9	1	47'-7"	1942
B2	12	#9	STR	46'-4"	1891
B3	30	#5	STR	57'-6"	1800
B4	48	#4	STR	4'-5"	141
B5	48	#4	STR	29'-10"	957
B6	6	#5	STR	46'-3"	290
B7	6	#9	1	49'-8"	1014
B8	12	#9	1	41'-6"	1694
B9	6	#9	1	35'-4"	721
B10	6	#9	1	41'-6"	847
B11	4	#5	STR	33'-9"	141
B12	96	#4	STR	4'-2"	268
H1	15	#4	6	17'-3"	173
H2	15	#4	6	17'-0"	171
H3	13	#4	5	16'-3"	142
H4	13	#4	5	16'-7"	145
K1	84	#4	STR	25'-11"	1455
K2	8	#4	STR	2'-9"	15
S1	190	#5	2	5'-4"	1057
S2	73	#5	3	13'-11"	1060
S3	84	#5	3	15'-3"	1337
S4	33	#5	3	12'-7"	434
S5	2	#5	2	5'-4"	12
S6	2	#5	2	5'-5"	12
S7	2	#5	2	5'-6"	12
S8	2	#5	2	5'-7"	12
S9	1	#5	3	13'-11"	15
S10	1	#5	3	14'-0"	15
S11	1	#5	3	14'-1"	15
S12	1	#5	3	14'-2"	15
S13	1	#5	3	12'-7"	14
S14	1	#5	3	12'-8"	14
S15	1	#5	3	12'-9"	14
S16	1	#5	3	12'-10"	14
S17	252	#4	4	7'-4"	1235
S18	6	#6	9	10'-1"	91
S19	6	#6	8	5'-4"	49
S20	160	#4	4	3'-8"	392

BAR	NO.	SIZE	TYPE	LENGTH	WEIGHT
U1	144	#4	4	7'-5"	714
U2	9	#5	7	7'-6"	71
U3	5	#5	4	6'-8"	35
U4	5	#5	4	6'-0"	32
U5	8	#5	4	12'-11"	108
U6	9	#5	4	14'-3"	134
U7	4	#5	4	11'-7"	49
V1	320	#5	STR	8'-10"	2949
V2	14	#5	STR	11'-6"	168
V3	18	#5	STR	11'-4"	213
V4	14	#5	STR	10'-4"	151
V5	16	#5	STR	10'-2"	170
V6	10	#5	STR	11'-8"	122
V7	10	#5	STR	10'-7"	111

REINFORCING STEEL	LBS.	24,653
CLASS A CONCRETE		
POUR #1 (COLLARS, CAP, LOWER PART OF WINGS)	CU. YDS.	166.3
POUR #2 (BACKWALL & UPPER PART OF WINGS)	CU. YDS.	46.9
TOTAL	CU. YDS.	213.2
HP 14x73 STEEL PILES		
	NO.	LF.
PILES W1, 2-7 (FRONT ROW), 1-7 (BACK ROW)	14	380
PILES 8-14 (FRONT ROW), 8-14 (BACK ROW)	14	590
PILES 15-20 (FRONT ROW), 15-21 (BACK ROW), W2	14	660
TOTAL	42	1630
PILE DRIVING EQUIPMENT SETUP FOR HP14x73 STEEL PILES	EA.	42

PILE LENGTHS ARE BASED ON ESTIMATED TIP ELEVATIONS AND INCLUDE 2' MIN. EMBEDMENT INTO CAP.

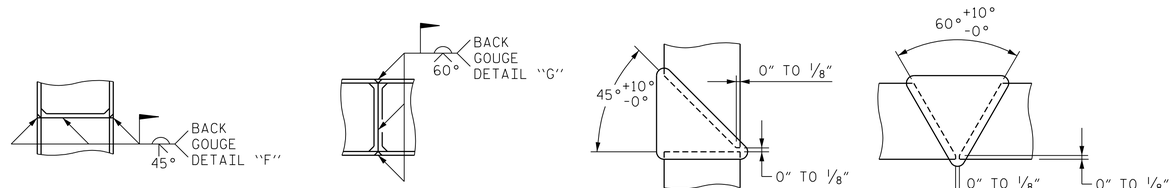

✱ PILE VERTICAL

✱ PILE HORIZONTAL OR VERTICAL

DETAIL "F"

DETAIL "G"

✱ POSITION OF PILE DURING WELDING

PILE SPLICE DETAILS

PROJECT NO. U-2579AB

FORSYTH COUNTY

STATION: 47+28.33 -Y15REV-

SHEET 6 OF 6

STATE OF NORTH CAROLINA
DEPARTMENT OF TRANSPORTATION
RALEIGH

SUBSTRUCTURE END BENT 1 COMMON DETAILS

NORTH CAROLINA PROFESSIONAL SEAL 29589 ENGINEER DOMENIC A. COLETTI

10/18/2021

HDR Engineering, Inc. of the Carolinas
555 Fayetteville St., Suite 900 Raleigh, N.C. 27601
N.C.B.E.L.S. License Number: F-0116

DOCUMENT NOT CONSIDERED FINAL UNLESS ALL SIGNATURES COMPLETED

REVISIONS						
NO.	BY:	DATE:	NO.	BY:	DATE:	
1	--	--	3	--	--	
2	--	--	4	--	--	

SHEET NO. S03-44
TOTAL SHEETS 61

DES BY: S. NIFONG	DATE: 02/19	DWG BY: B. PETERSON	DATE: 02/19
DES CHK: M. NEIHEISEL	DATE: 02/19	CHK BY: M. NEIHEISEL	DATE: 05/19

PLOT DRIVER: NCDOT_pdf_color_eng_50.plt USER: PPETERSO DATE: 10/14/2021 FILE: ...\SUBSTRUCTURE END B
PENTABLE: NCDOT STRUCTURES DEFAULT PEN.tbl TIME: 3:50:48 PM