DocuSign Envelope ID: FF6D8BE7-FEBC-40BC-8CDE-240E617D4E29

## NOTES

FOR SECTIONS C-C, D-D AND E-E, SEE "SUBSTRUCTURE END BENT 1 SECTIONS AND DETAILS" SHEET 5 OF 6.

ELEVATIONS MARKED WITH AN ASTERISK (✱) ARE GIVEN AT THE FRONT OF THE CAP. SEE SECTION A-A FOR MORE INFORMATION.

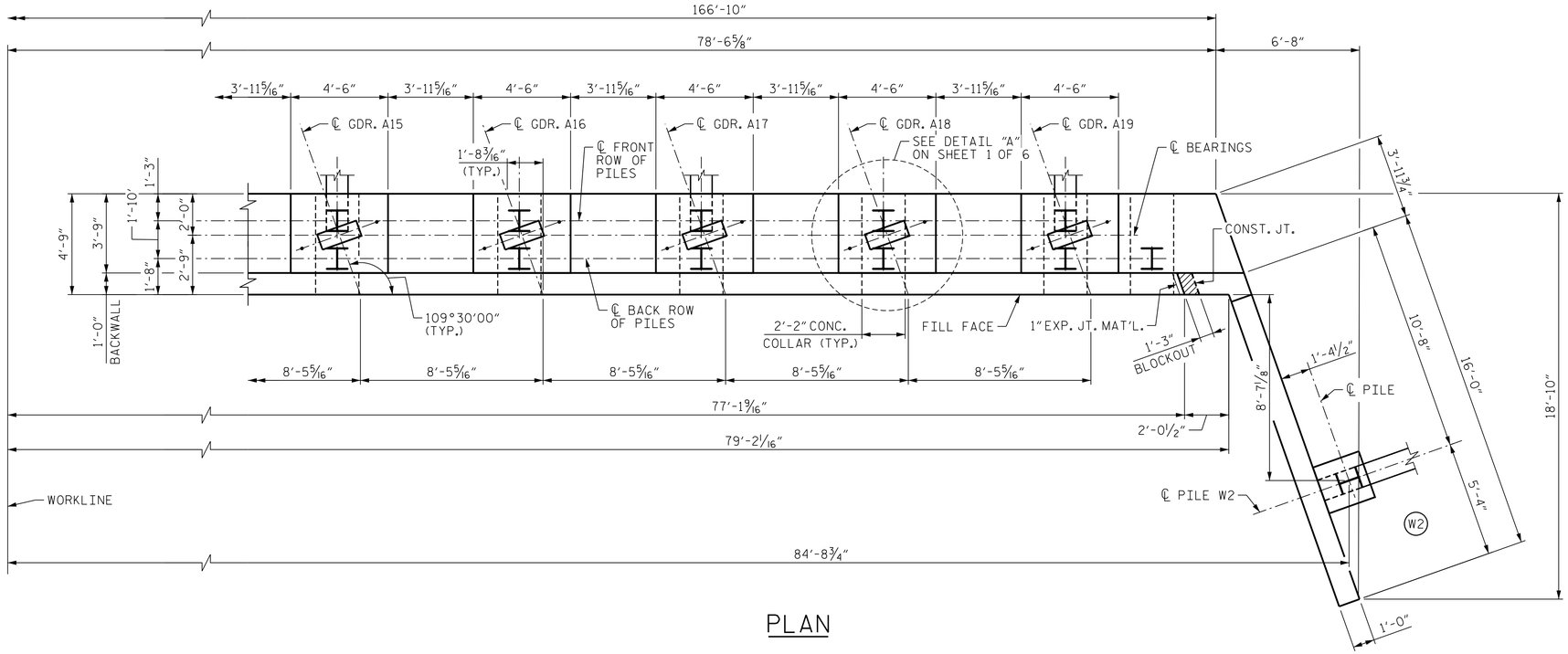


PLAN

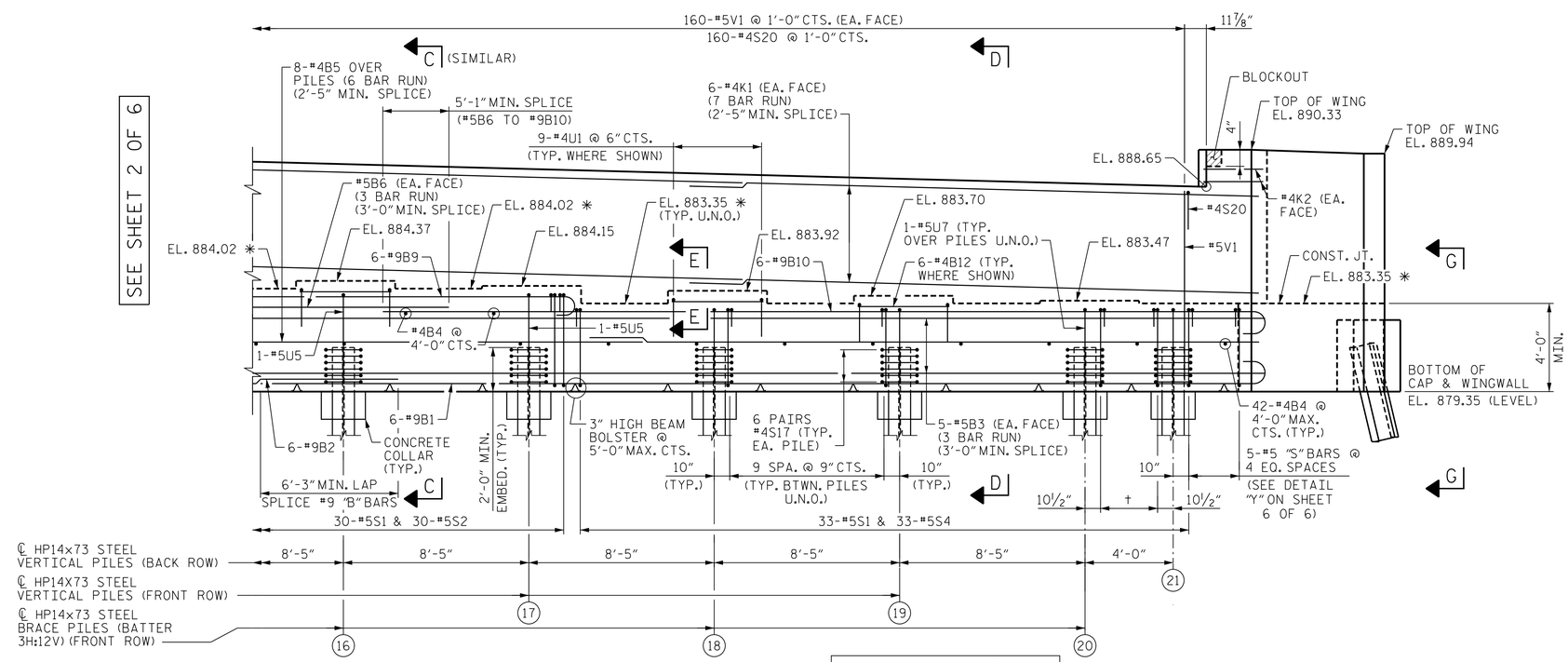


ELEVATION

† = 4 - #5 "S" BARS @ 9" CTS.

| | | | |
|---|---|---|---|
| DES BY: S. NIFONG | DATE: 02/19 | DWG BY: B. PETERSON | DATE: 02/19 |
| DES CHK: M. NEIHEISEL | DATE: 02/19 | CHK BY: M. NEIHEISEL | DATE: 05/19 |

HDR Engineering, Inc. of the Carolinas
555 Fayetteville St., Suite 900 Raleigh, N.C. 27601
N.C.B.E.L.S. License Number: F-0116

DOCUMENT NOT CONSIDERED FINAL UNLESS ALL SIGNATURES COMPLETED

NORTH CAROLINA PROFESSIONAL SEAL 29589 ENGINEER DOMENIC A. COLETTI

10/18/2021

PROJECT NO. U-2579AB

FORSYTH COUNTY

STATION: 47+28.33 -Y15REV-

SHEET 3 OF 6

STATE OF NORTH CAROLINA
DEPARTMENT OF TRANSPORTATION
RALEIGH

# SUBSTRUCTURE END BENT 1

| REVISIONS | | | | | | | | SHEET NO. S03-41 |
|---|---|---|---|---|---|---|---|---|
| NO. | BY: | DATE: | NO. | BY: | DATE: | | | |
| 1 | -- | -- | 3 | -- | -- | | | TOTAL SHEETS 61 |
| 2 | -- | -- | 4 | -- | -- | | | |

PLOT DRIVER: NCDOT_pdf_color_eng_50.plt USER: PPETERSO DATE: 10/14/2021 FILE: ...\SUBSTRUCTURE END B
PENTABLE: NCDOT STRUCTURES DEFAULT PEN.tbl TIME: 3:50:22 PM