DocuSign Envelope ID: 038DF3FE-B50D-4BC8-AD9A-6DCB1AA8418D

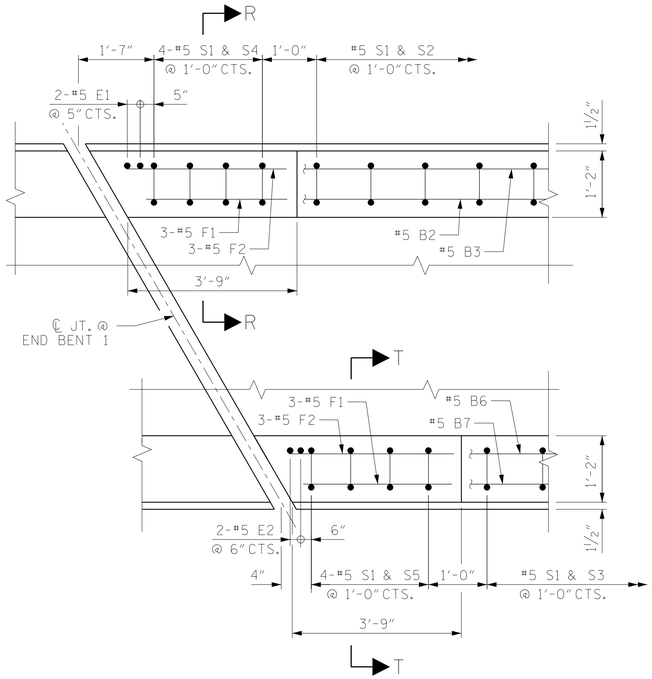

PLAN VIEW @ END BENT 1

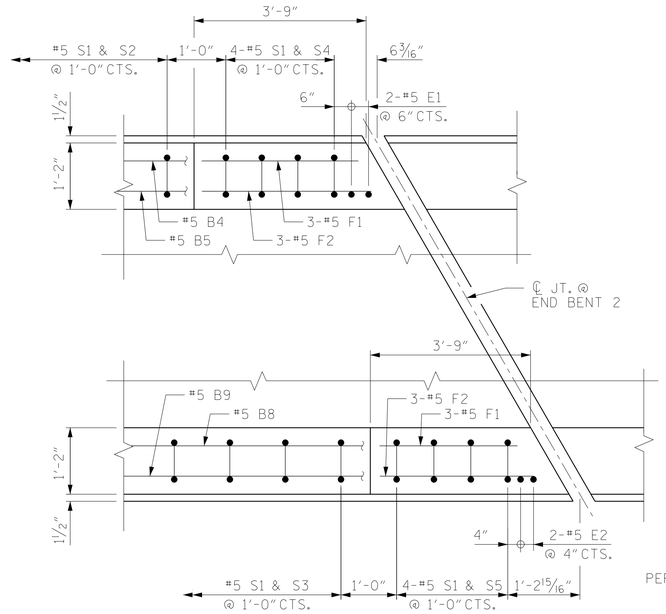

PLAN VIEW @ END BENT 2

BAR TYPES

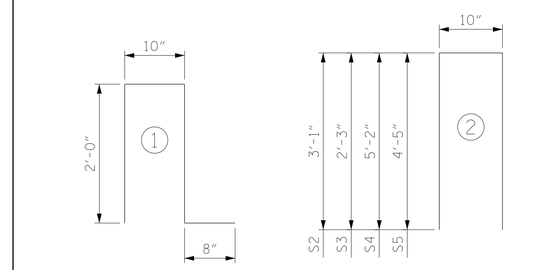

ALL BAR DIMENSIONS ARE OUT TO OUT

BILL OF MATERIAL FOR CONCRETE PARAPET

BAR	NO.	SIZE	TYPE	LENGTH	WEIGHT
* B1	216	#5	STR	25'-7"	5764
* B2	5	#5	STR	18'-6"	96
* B3	5	#5	STR	19'-3"	100
* B4	5	#5	STR	21'-9"	113
* B5	5	#5	STR	22'-5"	117
* B6	4	#5	STR	17'-4"	72
* B7	4	#5	STR	16'-7"	69
* B8	4	#5	STR	21'-4"	89
* B9	4	#5	STR	21'-11"	91
* E1	4	#5	STR	5'-4"	22
* E2	4	#5	STR	4'-5"	18
* F1	12	#5	STR	3'-7"	45
* F2	12	#5	STR	4'-3"	53
* S1	704	#5	1	5'-6"	4038
* S2	345	#5	2	7'-0"	2519
* S3	343	#5	2	5'-4"	1908
* S4	8	#5	2	11'-2"	93
* S5	8	#5	2	9'-8"	81

* EPOXY COATED REINFORCING STEEL 15,288 LBS.

CLASS AA CONCRETE 90.2 C.Y.

1'-2" X 2'-6" CONCRETE PARAPET 351.6 L.F.
1'-2" X 3'-3½" CONCRETE PARAPET 354.1 L.F.

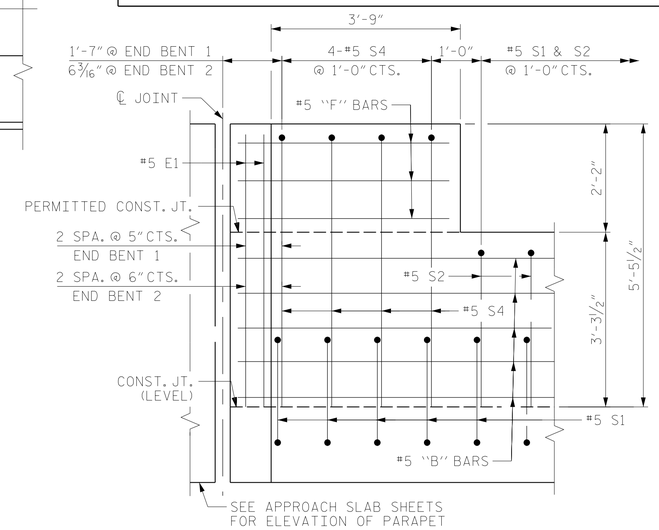

ELEVATION VIEW OF LEFT PARAPET

(END BENT 1 SHOWN, END BENT 2 SIMILAR)

NOTES:

THE CONCRETE PARAPET IN EACH SPAN SHALL NOT BE CAST UNTIL ALL SLAB CONCRETE IN THAT SPAN HAS BEEN CAST AND HAS REACHED A MINIMUM COMPRESSION STRENGTH OF 3,000 PSI.

ALL REINFORCING STEEL IN THE CONCRETE PARAPET SHALL BE EPOXY COATED.

SEE "GUARDRAIL ANCHORAGE DETAILS FOR METAL RAILS" SHEET FOR GUARDRAIL ANCHOR ASSEMBLY.

GROOVED CONTRACTION JOINTS, ½" IN DEPTH, SHALL BE TOOLED IN ALL EXPOSED FACES OF THE PARAPET AND IN ACCORDANCE WITH ARTICLE 825-10(B) OF THE STANDARD SPECIFICATIONS. THE CONTRACTION JOINT SHALL BE LOCATED AT EACH THIRD POINT BETWEEN PARAPET EXPASION JOINTS. ONLY ONE CONTRACTION JOINT IS REQUIRED AT MIDPOINT OF PARAPET SEGMENTS LESS THAN 20 FEET IN LENGTH AND NO CONTRACTION JOINTS ARE REQUIRED FOR THOSE SEGMENTS LESS THAN 10 FEET IN LENGTH.

#5 "S" BARS MAY BE SHIFTED AS NECESSARY TO CLEAR EXPANSION JOINTS IN RAIL.

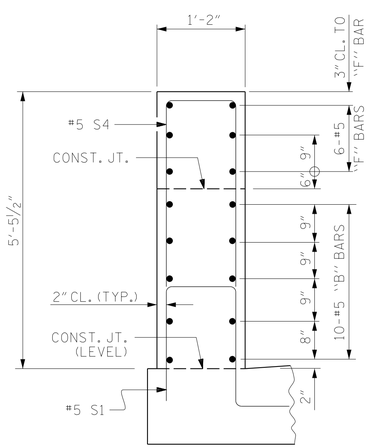

SECTION R-R

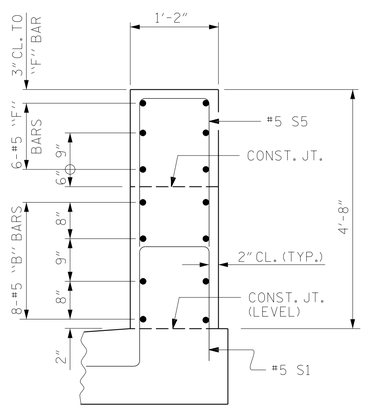

SECTION T-T

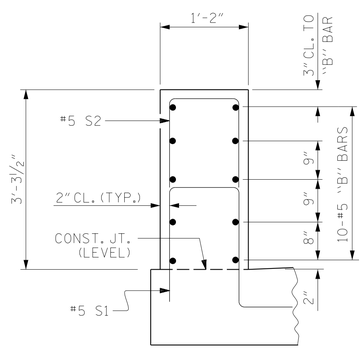

SECTION THROUGH LEFT PARAPET

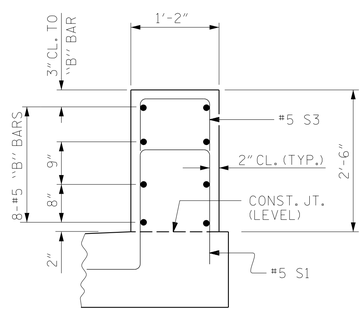

SECTION THROUGH RIGHT PARAPET

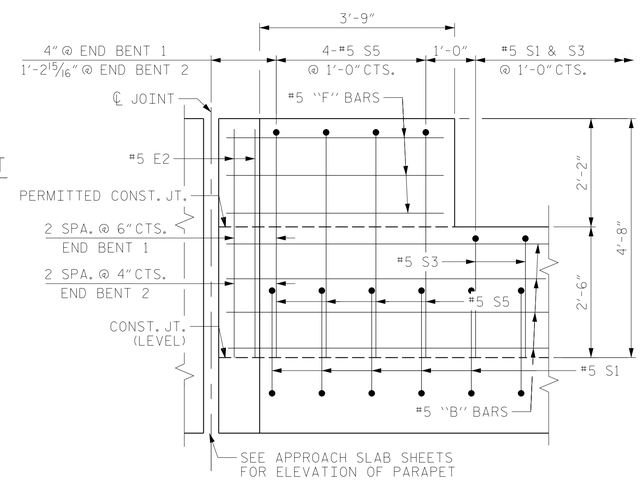

ELEVATION VIEW OF RIGHT PARAPET

(END BENT 1 SHOWN, END BENT 2 SIMILAR)

PROJECT NO. U-2579AB
FORSYTH COUNTY
STATION: 22+26.35 -Y1B-

SHEET 2 OF 5

DRAWN BY : NSC DATE : 08/2019
CHECKED BY : MRA DATE : 11/2019
DESIGN ENGINEER OF RECORD: MAL DATE : 11/2019

DOCUMENT NOT CONSIDERED FINAL UNLESS ALL SIGNATURES COMPLETED

NORTH CAROLINA PROFESSIONAL SEAL 18442 ENGINEER RICHARD LEON BOLLINGER JR.
SCOTT P. BRADLEY
10/14/2021

RS&H
RS&H Architects-Engineers-Planners, Inc.
8521 Six Forks Road, Suite 400
919-926-4100 FAX 919-846-9080
www.rsandh.com
North Carolina License Nos. 50073 * F-0493 * C-28

STATE OF NORTH CAROLINA
DEPARTMENT OF TRANSPORTATION
RALEIGH

SUPERSTRUCTURE

CONCRETE PARAPET DETAILS

REVISIONS						SHEET NO.
NO.	BY:	DATE:	NO.	BY:	DATE:	S1-21
1			3			TOTAL SHEETS
2			4			47

10/14/2021
X:\P\1031785002 U-2579AB WS North Beltway\Design\Structures\CAD\Site 1\401_041_U2579AB_SMU_2MR_S-21_330722.dgn
CuanyN