DocuSign Envelope ID: 50108D4C-3D85-4D54-8784-361D637CD923

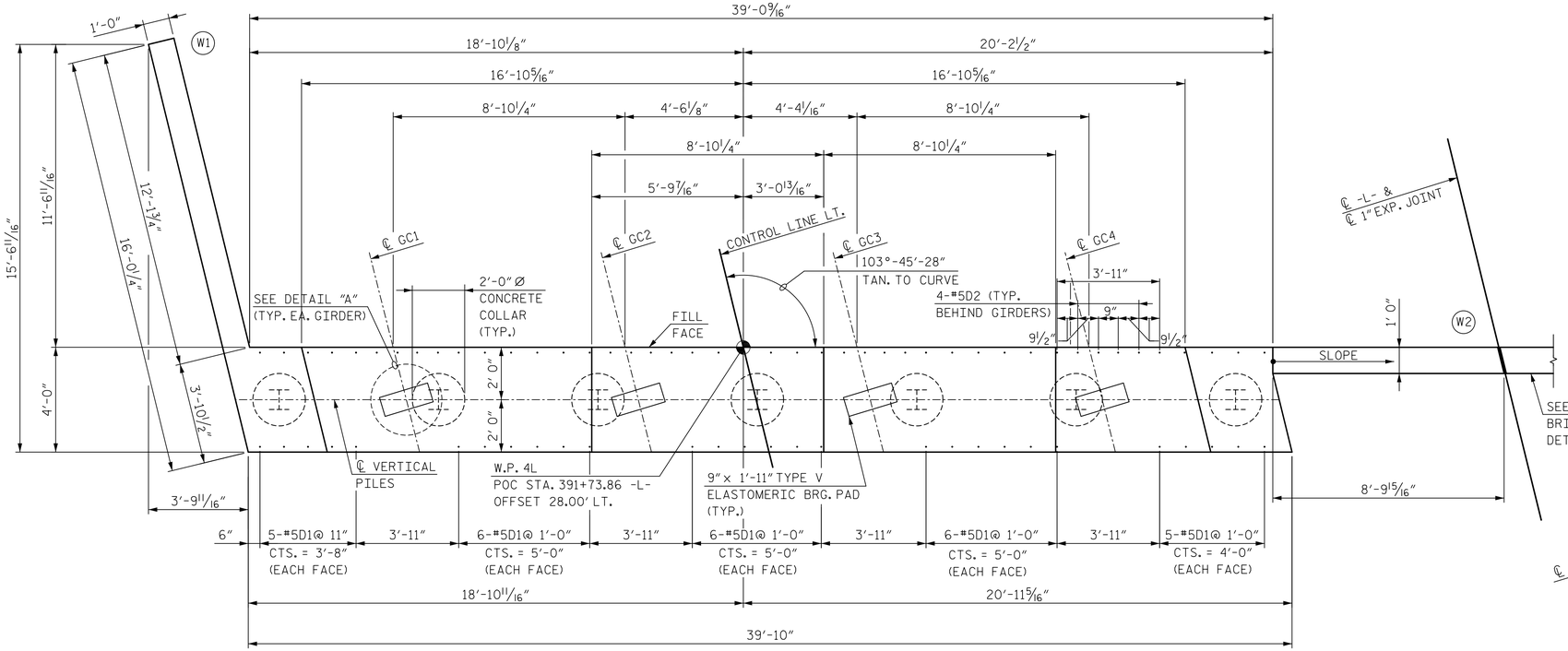

PLAN

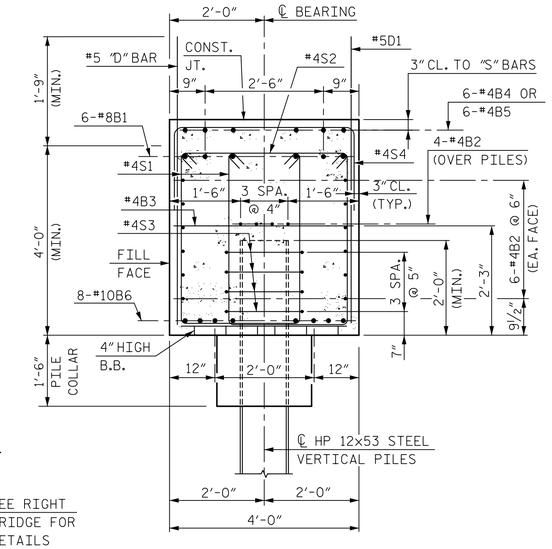

SECTION A-A

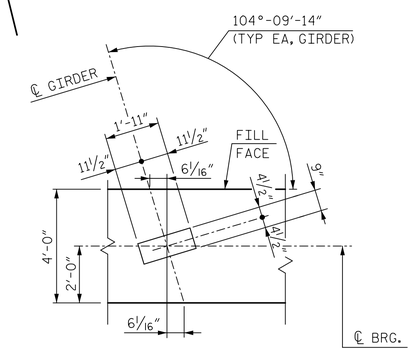

DETAIL A

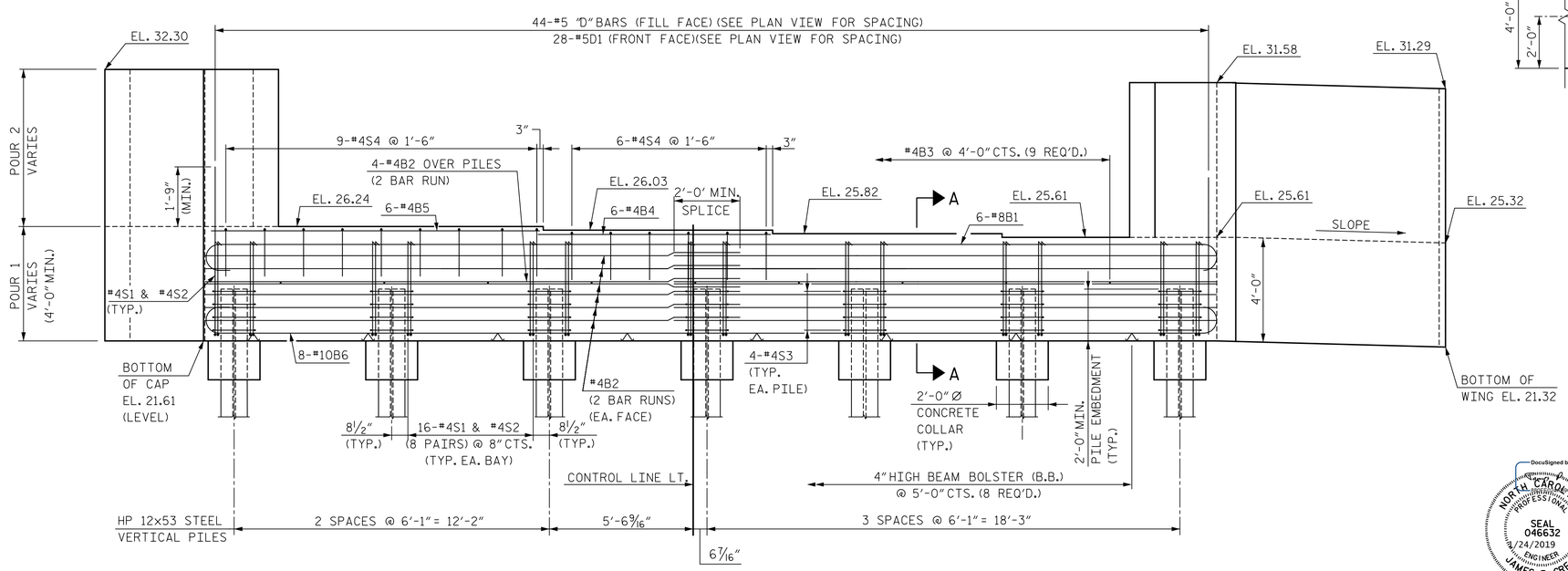

ELEVATION

NOTES:

FOR NOTES, SEE SHEET 3 OF 3.

FOR WINGWALLS DETAILS, SEE SHEET 2 OF 3.

PROJECT NO. R-5021

BRUNSWICK COUNTY

STATION: POC 390+15.00 -L-

SHEET 3 OF 3

STATE OF NORTH CAROLINA
DEPARTMENT OF TRANSPORTATION
RALEIGH

SUBSTRUCTURE

END BENT 2

LEFT LANE

DocuSigned by:
NORTH CAROLINA PROFESSIONAL SEAL 046632 ENGINEER JAMES P. GREGG
10/24/2019

HNTB NORTH CAROLINA, P.C.
NC License No. C-1554
343 E. Six Forks Rd., Suite 200, Raleigh, N.C. 27609

DRAWN BY A. SMITH DATE 6/17
CHECKED BY B. EMAMI DATE 8/17
DESIGN ENGINEER OF RECORD J. GREGG DATE 8/18

DWG. NO. 31

REVISIONS						SHEET NO.
NO.	BY	DATE	NO.	BY	DATE	S5-31
1			3			TOTAL SHEETS
2			4			39