DocuSign Envelope ID: BB62E2A3-BA2F-42C5-8DFF-4482B53427D4

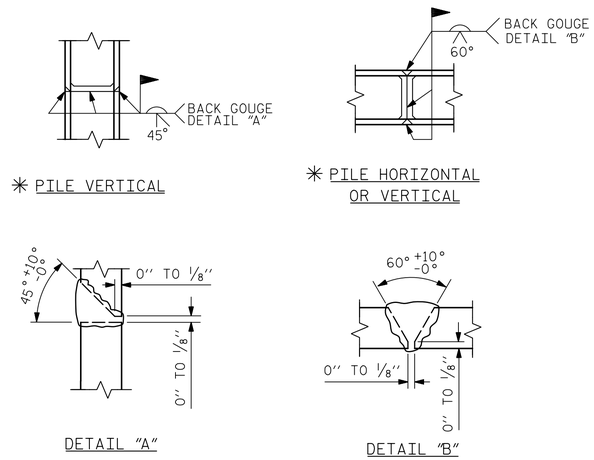

✳ POSITION OF PILE DURING WELDING.

PILE SPLICE DETAILS

BAR TYPES

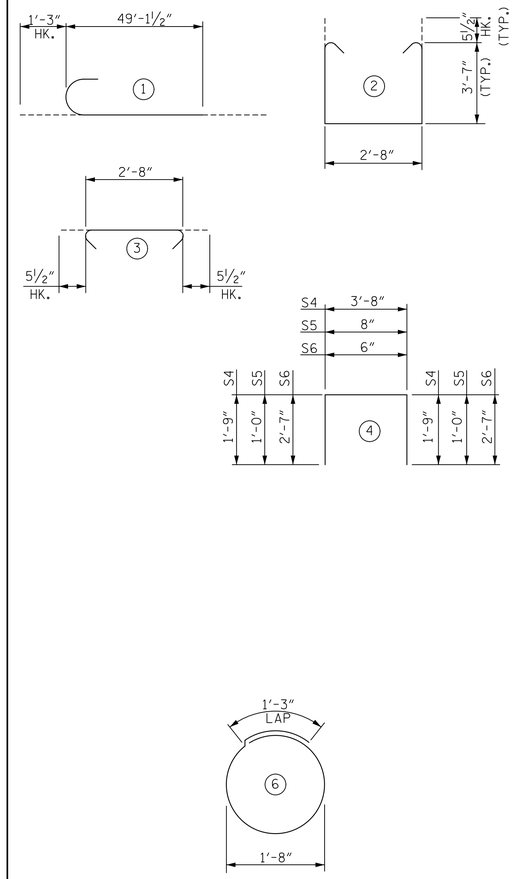

ALL BAR DIMENSIONS ARE OUT TO OUT

BILL OF REINFORCING

END BENT 2

BAR	NO.	SIZE	TYPE	LENGTH	WEIGHT
B4	24	9	1	50'-5"	4,114
B5	64	4	STR.	24'-3"	1,037
B3	24	4	STR.	3'-8"	59
D1	178	5	STR.	5'-10"	1,083
S1	222	5	2	10'-9"	2,489
S2	222	5	3	3'-7"	830
S3	64	4	6	6'-6"	278

QUANTITIES

REINFORCING STEEL	LBS.	9,890
CLASS "A" CONCRETE	CU. YDS.	53.9
PILE REDRIVES	EA.	8
PILE DRIVING EQUIPMENT SETUP	EA.	16
STEEL PILE POINTS	EA.	16
HP 12x53 STEEL PILES	NO.	16
	FEET	1,440

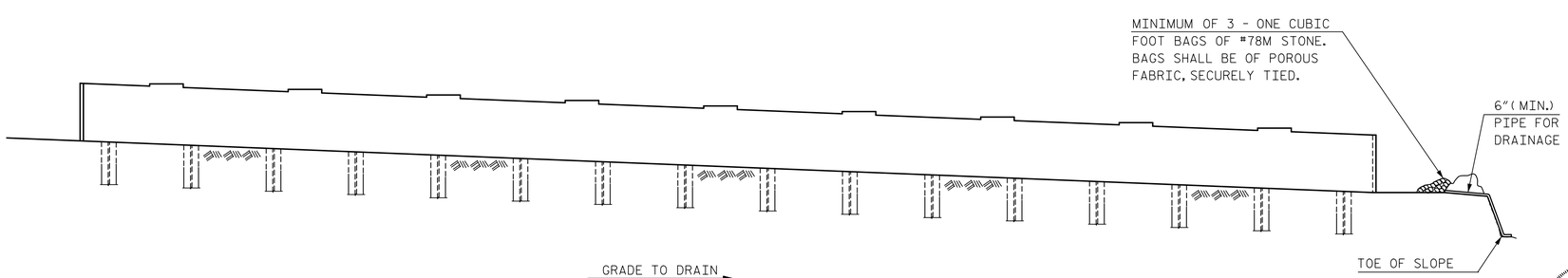

BAGGED STONE AND PIPE SHALL BE PLACED IMMEDIATELY AFTER COMPLETION OF END BENT EXCAVATION. PIPE MAY BE EITHER CONCRETE, CORRUGATED STEEL, CORRUGATED ALUMINUM ALLOY OR CORRUGATED PLASTIC. PERFORATED PIPE WILL NOT BE ALLOWED.

BAGGED STONE SHALL REMAIN IN PLACE UNTIL THE ENGINEER DIRECTS THAT IT BE REMOVED. THE CONTRACTOR SHALL REMOVE AND DISPOSE OF SILT ACCUMULATIONS AT BAGGED STONE WHEN SO DIRECTED BY THE ENGINEER. BAGS SHALL BE REMOVED AND REPLACED WHENEVER THE ENGINEER DETERMINES THAT THEY HAVE DETERIORATED AND LOST THEIR EFFECTIVENESS.

NO SEPARATE PAYMENT WILL BE MADE FOR THIS WORK AND THE ENTIRE COST OF THIS WORK SHALL BE INCLUDED IN THE UNIT CONTRACT PRICE FOR THE SEVERAL PAY ITEMS.

TEMPORARY DRAINAGE AT END BENT 2

PROJECT NO. R-5021
BRUNSWICK COUNTY
STATION: POC 31+30.81 -YREV-

SHEET 2 OF 2

DocuSigned by: R. Bruce Bosley
NORTH CAROLINA PROFESSIONAL SEAL 046234 ENGINEER R. BRUCE BOSLEY
12/7/2018

DocuSigned by: Paul J. Barber
NORTH CAROLINA PROFESSIONAL SEAL 12916 ENGINEER PAUL J. BARBER
12/7/2018

DOCUMENT NOT CONSIDERED FINAL UNLESS ALL SIGNATURES COMPLETED

STATE OF NORTH CAROLINA
DEPARTMENT OF TRANSPORTATION
RALEIGH

SUBSTRUCTURE

END BENT 2

HNTB
HNTB NORTH CAROLINA, P.C.
NC License No. C-1554
343 E. Six Forks Rd., Suite 200, Raleigh, N.C. 27609

DRAWN BY L. WATERS DATE 6/18
CHECKED BY J. ELKINS DATE 6/18
DESIGN ENGINEER OF RECORD B. BOSLEY DATE 12/18

DWG. NO. 21

REVISIONS						SHEET NO.
NO.	BY	DATE	NO.	BY	DATE	S3-21
1			3			TOTAL SHEETS
2			4			25