DocuSign Envelope ID: BB62E2A3-BA2F-42C5-8DFF-4482B53427D4

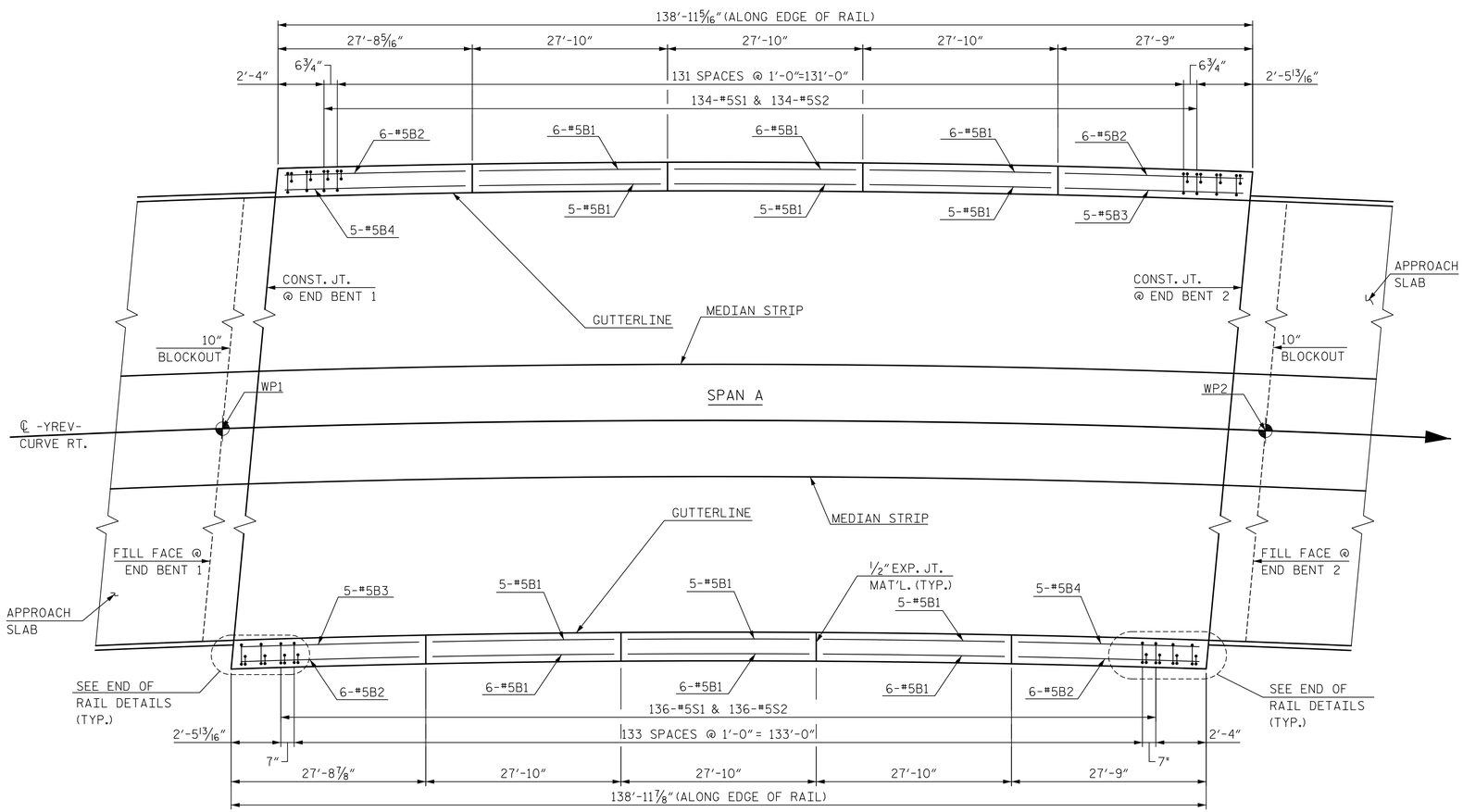

PLAN OF BARRIER RAIL

NOTE: EDGE OF SLAB NOT SHOWN FOR CLARITY.

NOTES

THE BARRIER RAIL IN EACH SPAN SHALL NOT BE CAST UNTIL ALL SLAB CONCRETE IN THAT SPAN HAS BEEN CAST AND HAS REACHED A MINIMUM COMPRESSIVE STRENGTH OF 3,000 PSI.

ALL REINFORCING STEEL IN BARRIER RAILS SHALL BE EPOXY COATED.

THE #5 S1 AND #5 S2 MAY BE SHIFTED SLIGHTLY AS REQUIRED TO PROVIDE 2" MINIMUM CONCRETE COVER AT THE 1/2" EXPANSION JOINTS IN THE BARRIER RAIL

GROOVED CONTRACTION JOINTS, 1/2" IN DEPTH, SHALL BE TOOLED IN ALL EXPOSED FACES OF THE BARRIER RAIL AND IN ACCORDANCE WITH ARTICLE 825-10(B) OF THE STANDARD SPECIFICATIONS. THE CONTRACTION JOINT SHALL BE LOCATED AT EACH THIRD POINT BETWEEN BARRIER RAIL EXPANSION JOINTS. ONLY ONE CONTRACTION JOINT IS REQUIRED AT MIDPOINT OF BARRIER RAIL SEGMENTS LESS THAN 20 FEET IN LENGTH AND NO CONTRACTION JOINTS ARE REQUIRED FOR THOSE SEGMENTS LESS THAN 10 FEET IN LENGTH.

BAR TYPES

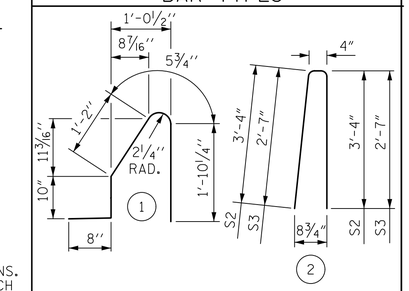

ALL BAR DIMENSIONS ARE OUT TO OUT

BILL OF MATERIAL

FOR CONCRETE BARRIER RAIL ONLY

BAR	NO.	SIZE	TYPE	LENGTH	WEIGHT
* B1	66	#5	STR.	27'-4"	1,882
* B2	24	#5	STR.	27'-3"	682
* B3	10	#5	STR.	26'-11"	281
* B4	10	#5	STR.	27'-8"	289
* S1	280	#5	1	4'-7"	1,339
* S2	272	#5	2	7'-0"	1,986
* S3	8	#5	2	5'-6"	46
* EPOXY COATED REINFORCING STEEL					6,505 LBS.
CLASS AA CONCRETE					37.8 CU. YDS.
CONCRETE BARRIER RAIL					278.0 LIN. FT.

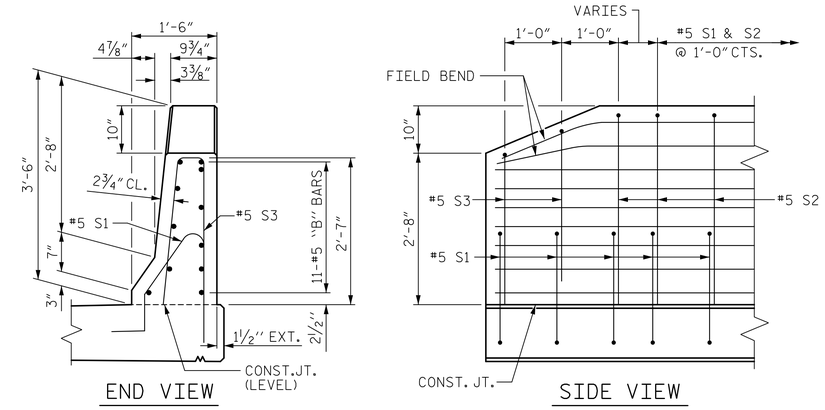

END OF RAIL DETAILS

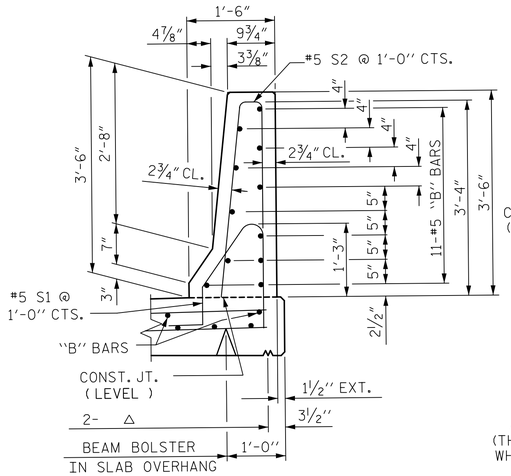

SECTION THRU RAIL
BARRIER RAIL DETAILS

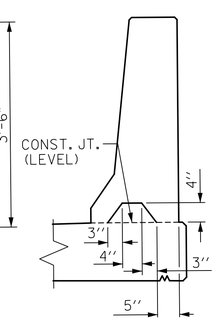

SECTION S-S

AT DAM IN OPEN JOINT
(THIS IS TO BE USED ONLY WHEN SLIP FORM IS USED)

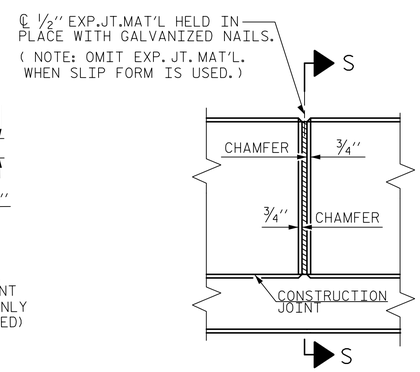

ELEVATION AT EXPANSION JOINTS

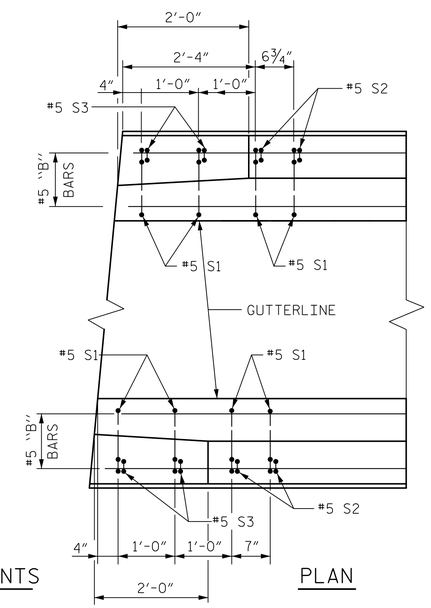

PLAN

PROJECT NO. R-5021

BRUNSWICK COUNTY

STATION: POC 31+30.81 -YREV-

DocuSigned by: R Bruce Bosley — NORTH CAROLINA PROFESSIONAL SEAL 046234 ENGINEER R. BRUCE BOSLEY — 12/7/2018

DocuSigned by: Paul J. Barber — NORTH CAROLINA PROFESSIONAL SEAL 12916 ENGINEER PAUL J. BARBER — 12/7/2018

DOCUMENT NOT CONSIDERED FINAL UNLESS ALL SIGNATURES COMPLETED

STATE OF NORTH CAROLINA
DEPARTMENT OF TRANSPORTATION
RALEIGH

STANDARD
CONCRETE BARRIER RAIL

HNTB NORTH CAROLINA, P.C.
NC License No. C-1554
343 E. Six Forks Rd., Suite 200, Raleigh, N.C. 27609

DRAWN BY L. WATERS DATE 6/18
CHECKED BY J. ELKINS DATE 6/18
DESIGN ENGINEER OF RECORD B. BOSLEY DATE 12/18

DWG. NO. 15

REVISIONS						SHEET NO.
NO.	BY	DATE	NO.	BY	DATE	S3-15
1			3			TOTAL SHEETS
2			4			25

ASSEMBLED BY : LLW		DATE : 12/17	
CHECKED BY : JVE		DATE : 12/17	
DRAWN BY : ARB 5/87	REV. 10/1/11	MAA/GM	
CHECKED BY : SJD 9/87	REV. 7/12	MAA/GM	
	REV. 6/13	MAA/GM	

STD. NO. CBR1