DocuSign Envelope ID: B08EC441-702C-432F-A99C-BDA943651073

Prepared In the Office of:

AECOM

AECOM TECHNICAL SERVICES OF NORTH CAROLINA, INC.
701 CORPORATE CENTER DRIVE, SUITE 475, RALEIGH, NC 27607
919-854-6200 919-854-6259 (fax)
F - 0342

PROJECT REFERENCE NO.	SHEET NO.
R-5021	UC-3N
DESIGNED BY:	
DRAWN BY:	
CHECKED BY:	
APPROVED BY:	
REVISED:	
NORTH CAROLINA DEPARTMENT OF TRANSPORTATION	
UTILITIES ENGINEERING SEC. PHONE:(919)707-6690 FAX:(919)250-4151	UTILITY CONSTRUCTION PLANS ONLY

9/9/2021
NORTH CAROLINA PROFESSIONAL SEAL 10666 ENGINEER D. STEPHEN SCRUGGS
DocuSigned by: D. Stephen Scruggs
C8FA7A0C0C0C4D...

DOCUMENT NOT CONSIDERED FINAL UNLESS ALL SIGNATURES COMPLETED

UTILITY CONSTRUCTION

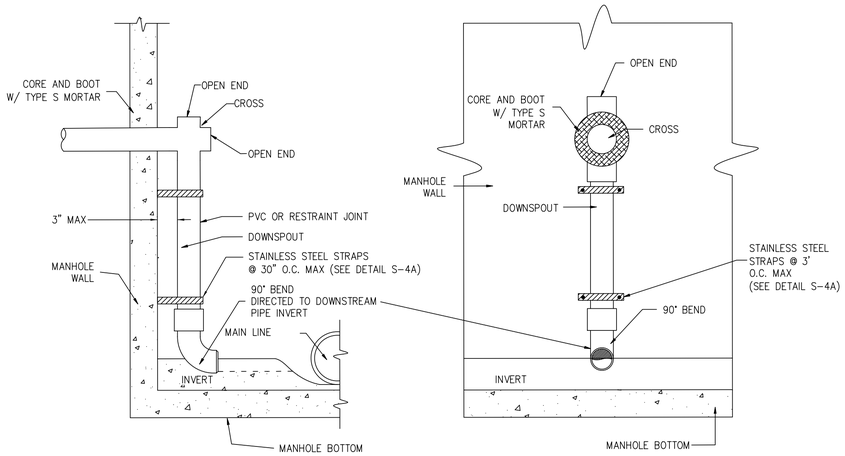

NOTES:

1. PIPING CONFIGURATION TO BE USED ON ALL DROPS ENTERING AT GREATER THAN 30" ABOVE BENCH.
2. FOR LOW PRESSURE SEWER CONNECTIONS, CROSS SHALL BE REPLACED BY A TEE (OPEN END UP).
3. FOR HIGH PRESSURE FORCE MAINS, CROSS SHALL BE REPLACED BY A RJ 90° BEND.
4. LINE MAY NOT ENTER MANHOLE THROUGH CONE SECTION OR THROUGH ANY JOINT.
5. STAINLESS STEEL STRAPPING SHALL BE 1" WIDE BY ⅛" THICK AND ATTACHED TO THE MANHOLE WALL WITH STAINLESS STEEL MASONRY ANCHORS. FOR INTERIOR STRAPPING OF DROP PIPE, SEE DETAIL S-7A.

INSIDE DROP PIPING
FOR MANHOLE
DETAIL S-7

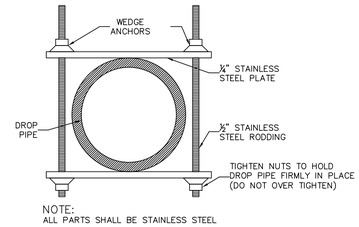

NOTE:
ALL PARTS SHALL BE STAINLESS STEEL

DROP PIPE STRAP
DETAIL S-7A

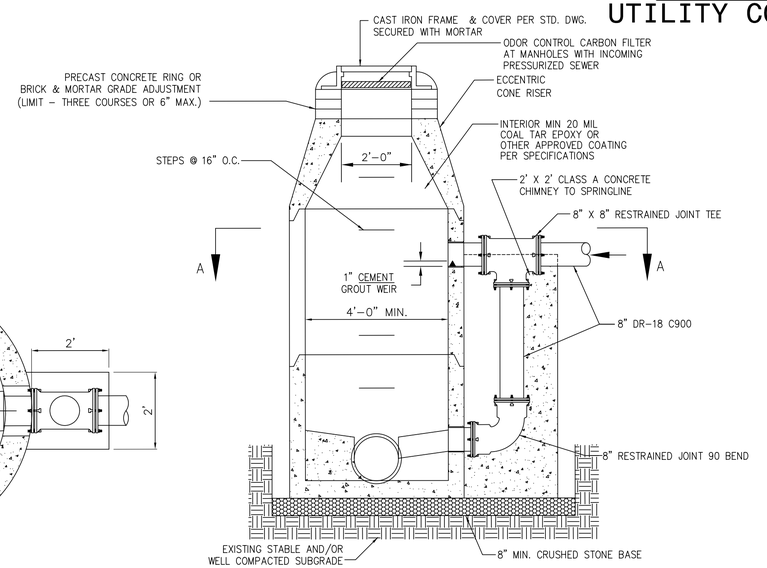

SECTION A-A

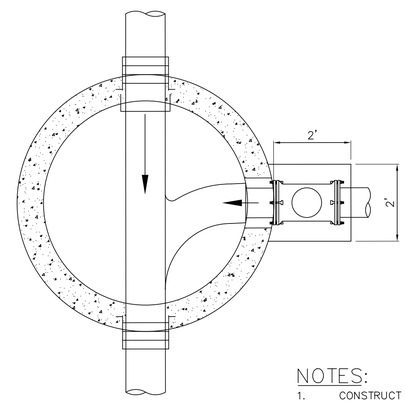

NOTES:

1. CONSTRUCT OUTSIDE DROP CONCRETE AND PIPING WITH EACH SECTION OF MANHOLE RISER.
2. DO NOT RETROFIT OUTSIDE DROP TO EXISTING MANHOLE. USE INSIDE DROP INSTEAD.
3. ALL OUTSIDE DROP SANITARY SEWER MANHOLES MUST BE APPROVED BY BRUNSWICK COUNTY ENGINEERING.
4. ALL EXTERIOR JOINTS SHALL BE SEALED WITH A 4" WIDE BUTYL RUBBER WRAP.

PRECAST MANHOLE WITH OUTSIDE DROP
DETAIL S-8

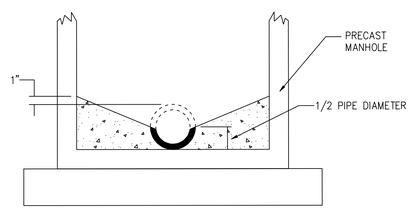

SECTION "A-A"

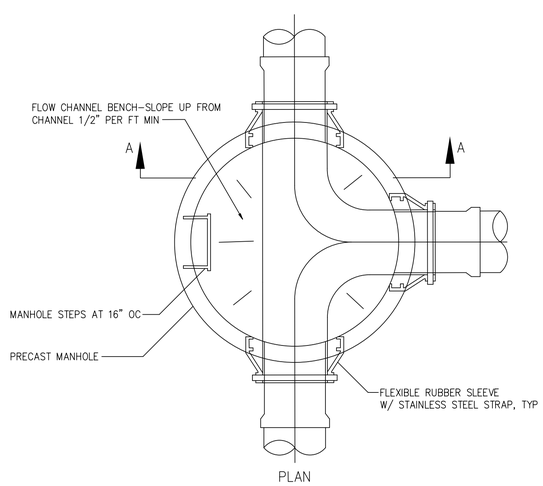

PLAN

TYPICAL MANHOLE INVERTS
DETAIL S-9

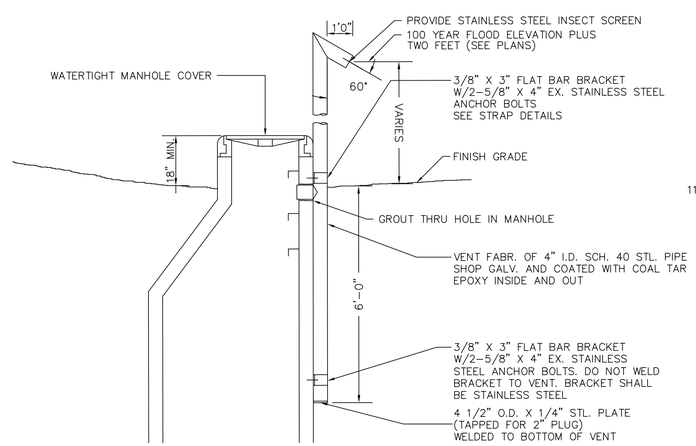

MANHOLE VENTING FOR FLOODPLAIN AREAS
DETAIL S-10

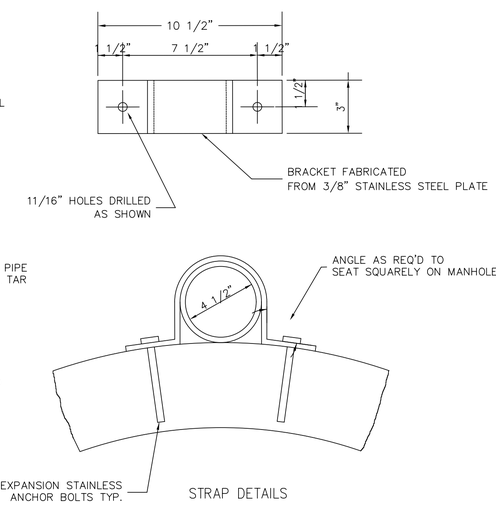

Revisions
1.1 - DATED 4/30/2013
Mod S-7, Add. S-7A
1.2 - DATED 1/23/2019
Mod S-7, S-8
1.3 - DATED 3/18/2020
Mod S-7

COUNTY OF BRUNSWICK

GENERAL SEWER DETAILS
FOR
BRUNSWICK COUNTY
NORTH CAROLINA

Date:	06-18-12
Scale:	NTS
Drawn By:	JDM
Checked By:	WLP

DATE: 8/13/2021
TIME: 12:39:38 PM
DGN: P:\5042828\3\900_Work\95_Utility Construction\R-5021_UC3N.dgn